thompson
COUPLINGS

TCAE

LEADING COUPLING AND DRIVELINE SOLUTIONS-THE COUPLINGS YOU CAN FIT AND FORGET

(Balanced to AGMA 9000-D, Grade 9)

- NO LASER ALIGNMENT
- WORKS IN HARSH ENVIRONMENTS
- REDUCES VIBRATION
- NO OR LOW MAINTENANCE
- REDUCED OPERATING & POWER COSTS
- COMPONENTS SERIAL NUMBERED

Thompson Couplings

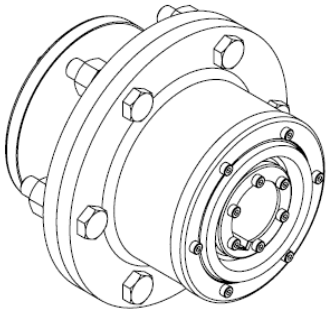

TCAE-S SERIES

A close-coupled design for applications where axial space is limited. In addition, an economical spacer design is available to extend the length of the coupling.

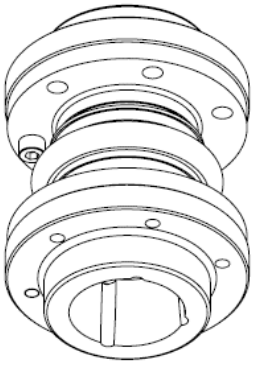

TCAE-V SERIES

A compact, heavy duty coupling with short axial dimensions capable of transmitting a high torque capacity. May be used in both horizontal and vertical applications.

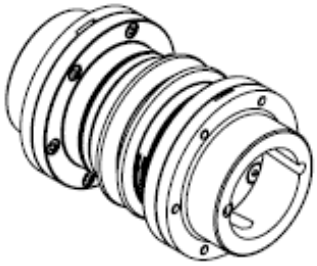

TCAE-R SERIES

The regular range of couplings delivering high performance across high-speed ranges, at constant velocity. Offers a long service life, high reliability and a high transmission efficiency.

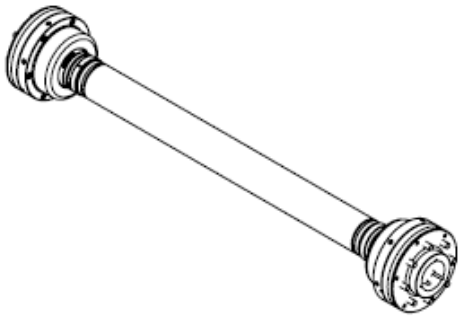

TCAE-L SERIES

The L-series makes use of either a hollow or solid shaft of varying lengths designed to the customer's requirements. The shaft may also be of a fixed or sliding type. Used where the distance between shaft ends is too large for a spacer type coupling.

TCAE-CM SERIES

Customised couplings designed to customer specifications. Contact Thompson Couplings for further information.

Contents

Coupling Selection Procedure

Quick Selection Method:

The following method allows a quick estimation of the coupling size. This method is based on standard industrial electric motor drives connected to devices such as centrifugal process pumps or similar.

a. Determine the electric motor rated power and speed (often listed on the motor nameplate)
b. Determine the type of TCAE coupling to be used:
   i. TCAE-S series
   ii. TCAE-V series
   iii. TCAE-R series
   iv. TCAE-L series
c. Enter the following table with the motor power and speed and coupling series type to locate the coupling size with the closest power rating.eg. motor power of 160kW running at 1,500 rpm

TCAE MODEL	Power [kW] at MSF 1.25		
	1000 rpm	1500 rpm	3000 rpm
TCAE-S-1	14	19	34
TCAE-S-2	28	39	68
TCAE-S-3	48	67	n/a **
TCAE-S-4	73	102	
TCAE-S-5	120	167	
TCAE-S-6	124	172	
TCAE-S-7	192	267	
TCAE-S-8	253	350	
TCAE-S-9	403	559	
TCAE-S-10	591	n/a **	
TCAE-S-11	840		
TCAE-S-12	1,161		
TCAE-S-13	1,550		
TCAE-S-14	2,183		
TCAE-V-00	6	8	14
TCAE-V-0	9	12	n/a **
TCAE-V-1	13	18	
TCAE-V-2	26	37	
TCAE-V-3	45	n/a **	
TCAE-V-4	68	n/a **	
TCAE-V-5	116	n/a **	
TCAE-V-6	201	278	
TCAE-V-7	268	372	
TCAE-V-8	549	762	
TCAE-V-9	757	1,050	
TCAE-V-10	1,042	n/a **	
TCAE-V-11	1,264		
TCAE-V-12	2,168		
TCAE-V-13	3,597		
TCAE-V-14	5,573		
TCAE-R-1	12	17	30
TCAE-R-2	30	42	74
TCAE-R-3	49	68	118
TCAE-R-4	77	106	184
TCAE-R-5	124	172	302
TCAE-R-6	166	230	n/a **
TCAE-R-7	240	334	
TCAE-R-8	316	442	
TCAE-L-1	12	17	30
TCAE-L-2	30	42	74
TCAE-L-3	49	68	118
TCAE-L-4	77	106	184
TCAE-L-5	124	172	302
TCAE-L-6	166	230	n/a **
TCAE-L-7	240	334	
TCAE-L-8	316	442	
TCAE-L-9	403	559	
TCAE-L-10	591	n/a **	
TCAE-L-11	840		
TCAE-L-12	1,161		
TCAE-L-13	1,550		
TCAE-L-14	2,183		

d. The above coupling size estimation is based on a machine service factor of 1.25 to give a running life of 7,200 hours (typical running time of 8 hours per day, 25 days per month for 3 years)
e. For other parameters refer to the following ***detailed selection method***, such as:
    i. diesel drives or turbines
    ii. other machine service factors
    iii. other running life requirements
    iv. other operating angles

Detailed Selection Method

The following method enables the user to determine the most suitable TCAE coupling for their specific application using a more comprehensive and detailed approach.

a. Determine the system power and operating speed for the drive. It is preferable to gather as much data as possible including:
    i. Actual consumed power of the driven device (pump, roller, gearbox etc). Note this is normally less than the actual rated power of the motor.
    ii. Shaft sizes and distance between ends (DBSE).
    iii. Operating hours or duty cycle required.
    iv. Worse case angle and / or distance of misalignment possible.
    v. Possible shock loading factors and/ or changes to the torque loading in operation.
    vi. Possibility of emergency stop situations which significantly magnifies the load on the drivetrain and coupling.
b. Many industrial systems driven by electric motors tend to be **constant** torque applications.
c. Calculate the ***nominal*** drive torque as follows: T (Nm) = kW x 9550 / rpm
d. However, systems that start/stop regularly or have oscillatory load patterns require an average or even an RMS value to be used to determine the nominal torque. Examples of these are shown below with their corresponding nominal values:

e.

Torque/Power fluctuation	*Example*	*Nominal torque T_n*
Constant	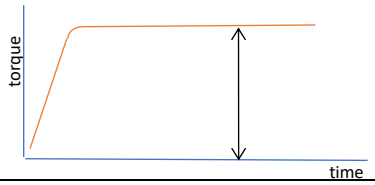	T_n = torque
Fluctuates in one direction with short peak times	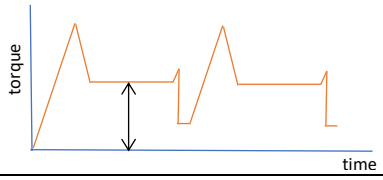	T_n = average torque over cycle
Fluctuates evenly in one direction	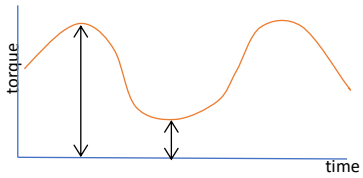	$T_n = 1/3^* (T_{min} + 2^*T_{max})$
Fluctuates forward and reverse with short peak times	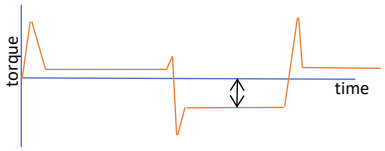	T_n = average torque over cycle of either forward or reverse cycle whichever is greater
Fluctuates evenly in both forward and reverse directions	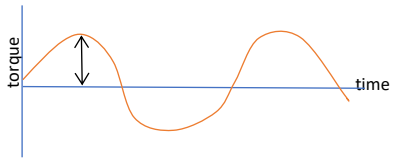	$T_n = 2/3^*T_{max}$

f. Determine the machine duty service type, **K_1**. The factor K_1 is governed by both the Machine Type and the Driven type. It is recommended deciding both machine factor and driven factor and using the larger of both for the value of K_1.

MACHINE FACTOR K_1:

MACHINE USED	FACTOR K_1
Electric motor	1
Turbine	1
Gasoline engine 4 cyl or more	1.25
Gasoline engine 3 cyl or less	1.5
Diesel engine 4 cyl or more	2
Diesel engine 3 cyl or less	3

DRIVEN DEVICE FACTOR K_1:

(SEE ALSO DETAILED TABLE FOR APPLICATIONS BELOW)

DRIVEN DUTY SERVICE TYPE	FACTOR K_1
SMOOTH	1
LIGHT DUTY	1.25
MODERATE DUTY	1.5
MEDIUM	1.75
HEAVY DUTY	2
VERY HEAVY DUTY	2.5
EXTREME SHOCK	3

MACHINE DUTY SERVICE TYPE						
SMOOTH	LIGHT DUTY	MODERATE DUTY	MEDIUM DUTY	HEAVYDUTY	VERY HEAVY DUTY	EXTREME SHOCK
Agitators	Belt conveyors	Beaters	Concrete mixers	Barge pullers	Ball mill drive	Conveyors - reciprocating
Blowers-centrifugal	Blowers-Vane	Blowers- lobe	Dredge - screen drives	Cranes - main hoist	Crushers -ore	Conveyors - shaking/live roll
Evaporators	compressor -centrifugal	Bucket conveyor	Dredge - stacker	Cranes -reversing	Crushers -stone	Metal rolling - feed rolls
Fans . Centrifugal	Fans -Induced draft	Compressor - lobe	Dredge - cable reels	Elevator -freight	Dredge - cutter head	Metal rolling - reversing rolls
Pumps - Centrifugal	Feeders	Dredge - conveyor	Dredge - winches	Fans - cooling tower	Feeder - reciprocating	Metal rolling - hot mills
Screens - Air washer	Machine-tool drives	Fans - propellor	Elevator -bucket	Generator - welding	Machine tool - tappers	Metal, rolling - Manipulators
Steering gear	Oil industry chillers	Fans -forced draft	Hoist - bridge drive	Hammer mills	Metal forming - Table conveyors	Metal rolling - merchant mill
Stokers	Paper mill - agitators	Line shaft conveyor	Hoist - skip	Laundry washer	Metal rolling - furnace pushers	Metal rolling - piercers
Rubber plant - Tyre press opener	Paper mill - conveyors	Metal forming - slitters	Hoist - trolley drive	Machine tool - bending rolls	Metal rolling- ingot cars	Metal rolling - reelers
Woodworking machinery	Screens - Travelling water	Metal forming- wire winder	Metal forming -wire winder	Machine tool - punch press	Metal rolling - kick outs	Metal rolling - rod & bar molls
	Sewage disposal equipment	Metal rolling - coilers (cold)	Metal rolling - cooler beds	Metal forming- draw bench drive	Metal rolling - pusher rams	Metal rolling - roughing mill feed rolls
	Textile dyeing machines	Metal rolling- wire drawing	Metal rolling - edger drive	Metal forming -extruder	Metal rolling - runout tables	Metal rolling – screwdown drive rolls
		Multers	Metal rolling - reel drives	Metal rolling - coiler (hot)	Metal rolling - saws	Metal rolling - skelp mills
		Paper mill - converters	Oil industry filter press	Metal rolling - door openers	Metal rolling – straighteners	Metal rolling - slitter rolls
		Paper mill - reelers	Paper mill - beater/pulper	Metal rolling - reel drums	Metal rolling - transfer tables	Metal rolling - slabbing molls
		Paper mill - winders	Paper mill - dryers	Metal rolling -draw bench	Metal rolling - tube conveyor roll	Metal rolling - soaking pit drive
		Printing presses	Paper mill - jordans	Mills - cement/kiln	Metal rolling- unscramblers	Metal rolling - thrust block drove
		Pumps - Gear/rotary/Vane	pumps - reciproc - 3 cyl+	Mills - pebble	Paper Mills - barker drum gear	Metal rolling - Traction drive
		Screens - Rotary stone/gravel	Timber - planer	Mills - tube	Paper Mills - chipper drive	
		Screw conveyor	Timber - slab conveyor	Mills - tumbling	Pumps - reciproc - 2cyl	
		Shredders	Timber - trimmer feed	Mills- dryers/coolers	Rubber plant - rubber mill	
		Textile machinery - dryers	Tumblers – barrel	Mills- rolling	Rubber plant - mixers	
		Timber - sorting table	Windlasses	Paper mills – barker mechanical	Rubber plant -tyre builder m/c	
		Utility winches		Paper mills – log haul drives	Screens - vibrating	
				Paper mills - super calendars		
				Paper mills -calendars		
				Pullers - barge haul		
				Rubber plant - calendars		
				Rubber plant - sheeter		
				Rubber plant - tuber/straightener		
				Timber - Barker (drum)		

g. Define the operating time factor based on the duty cycle, K_2

Operating hours / day	K_2	Operating hours / day	K_2	Operating hours /day	K_2
2	0.63	10	1.08	18	1.31
4	0.80	12	1.15	20	1.35
6	0.91	14	1.20	22	1.40
8	1	16	1.26	24	1.44

h. Define the angle factor based on the coupling operation angle, **K_3**

Operating angle degs	**K_3**
0	1
1	0.98
2	0.96
3	0.94
4	0.92
5	0.90

i. Determine the Equivalent Torque, **T_e** based on the following formula:

$$T_e = (K_1.K_2) \,.\, T_n / K_3$$

j. Determine the series of coupling required for the application (R, L, V, S) usually based on the distance between shaft ends (DBSE). Using the appropriate chart below for the required coupling series, position the intersection of the Equivalent torque **T_e** and the coupling speed, **RPM**

k. The selected coupling is found at the line above this intersection point.

l. Example: The Equivalent Torque **T_e** has been calculated at 1,000Nm and runs at 1,500 RPM and due to the DBSE required an TCAE- R series is selected. Following the graph for R series a size **TCAE-R-4** coupling is chosen to fulfil the requirements (Page 8).

m. These graphs for each TCAE series represent the coupling service life of 7,200 hours (equal to 8 hours per day, 25 days per month for 3 years)

n. For applications requiring more intricate operations and different service lives it is recommended to use the **Spreadsheet Selector Program.**

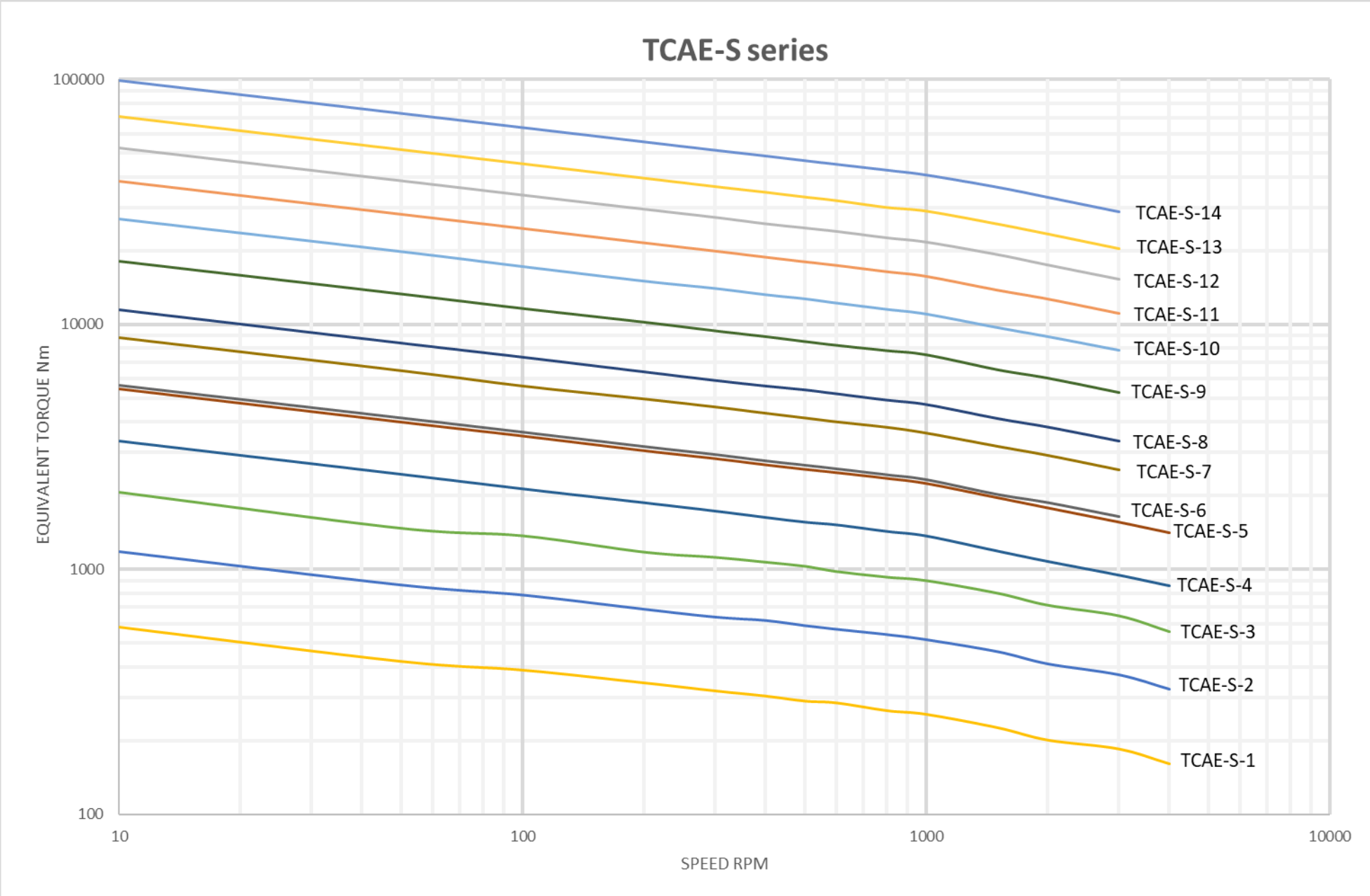
TCAE-S series
100000
10000
1000
100
EQUIVALENT TORQUE Nm
10
100
1000
10000
SPEED RPM
TCAE-S-14
TCAE-S-13
TCAE-S-12
TCAE-S-11
TCAE-S-10
TCAE-S-9
TCAE-S-8
TCAE-S-7
TCAE-S-6
TCAE-S-5
TCAE-S-4
TCAE-S-3
TCAE-S-2
TCAE-S-1

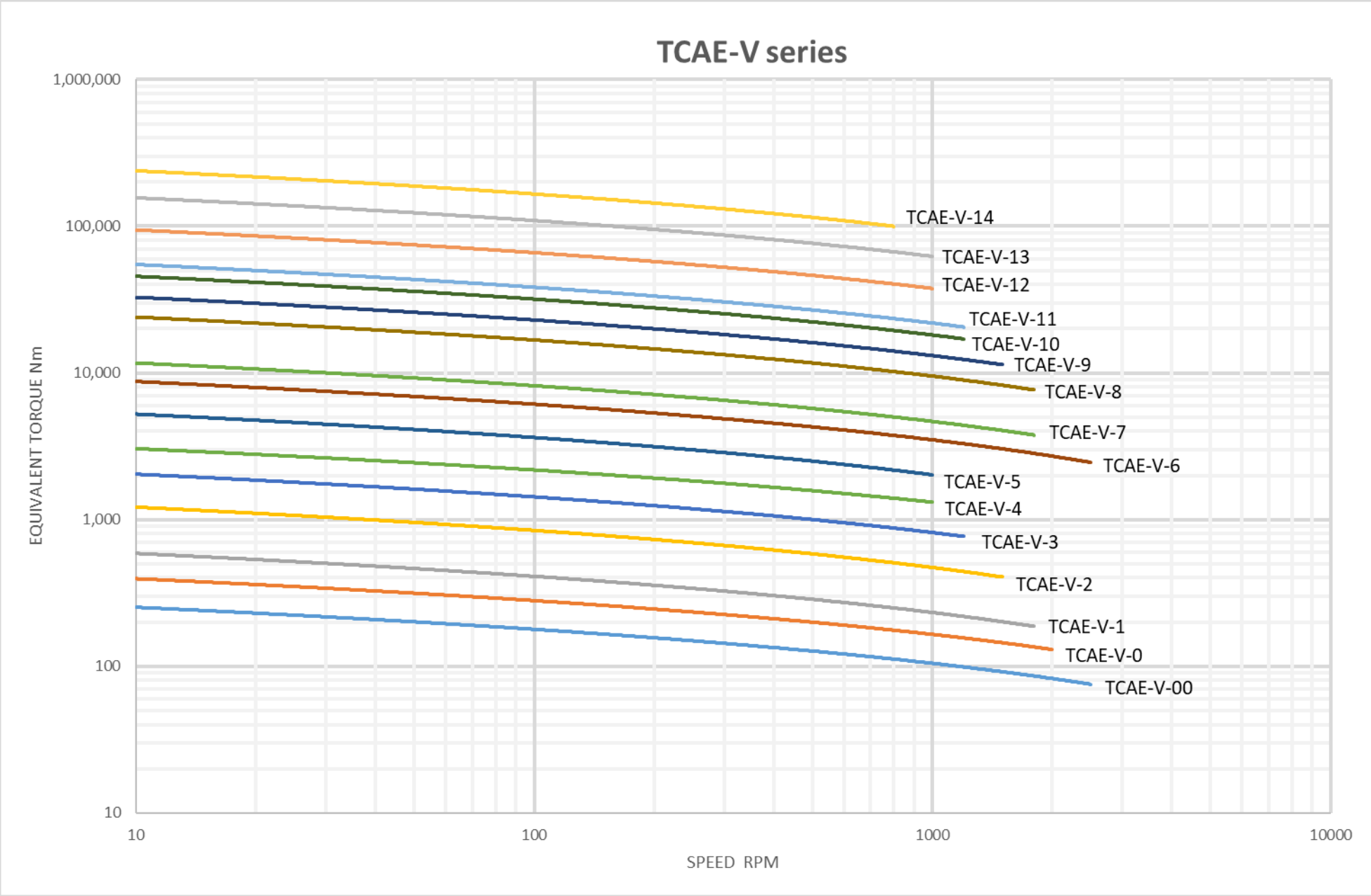
TCAE-V series
1,000,000
100,000
10,000
1,000
100
10
EQUIVALENT TORQUE Nm
10
100
1000
10000
SPEED RPM
TCAE-V-14
TCAE-V-13
TCAE-V-12
TCAE-V-11
TCAE-V-10
TCAE-V-9
TCAE-V-8
TCAE-V-7
TCAE-V-6
TCAE-V-5
TCAE-V-4
TCAE-V-3
TCAE-V-2
TCAE-V-1
TCAE-V-0
TCAE-V-00

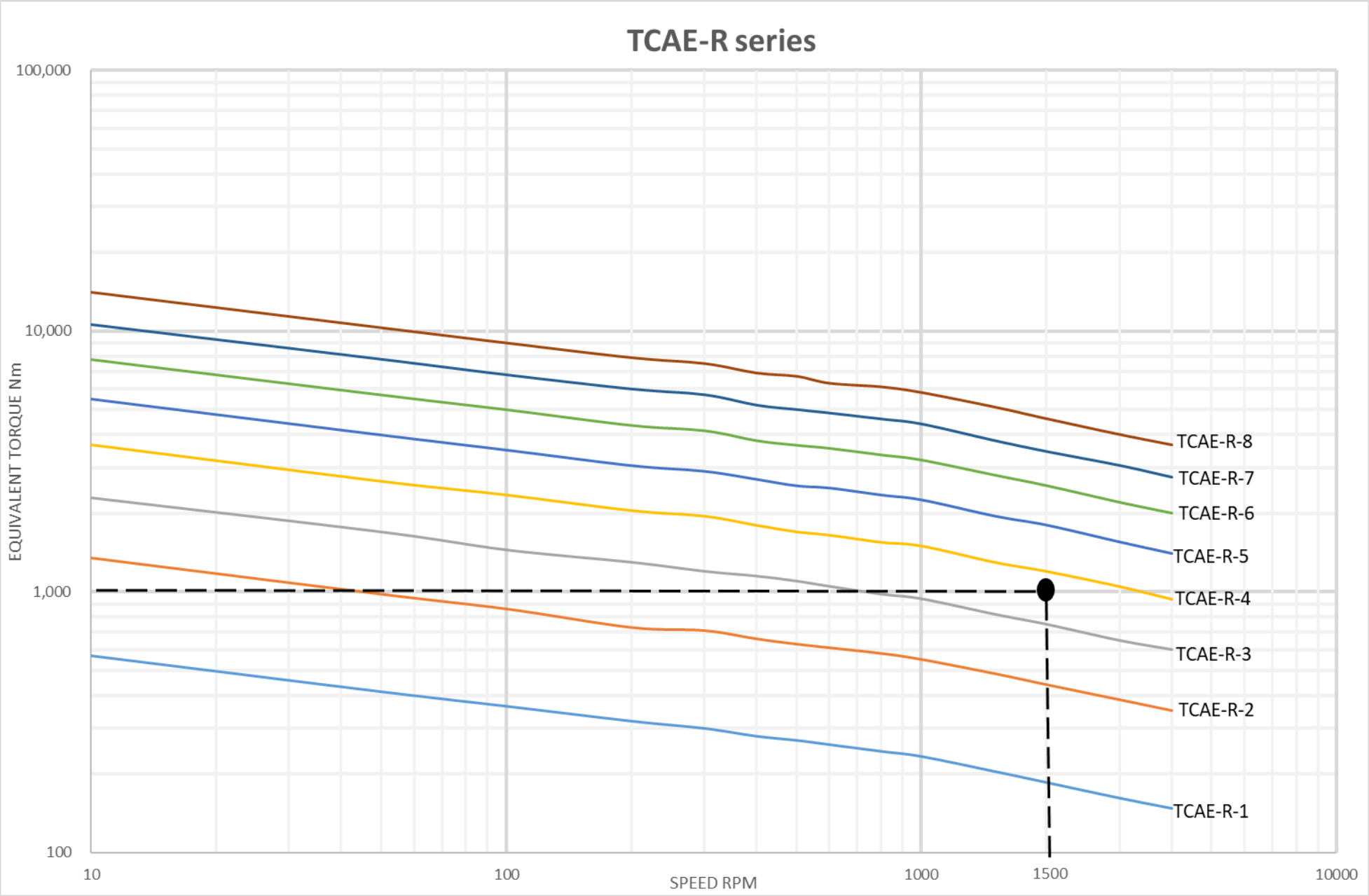
TCAE-R series
100,000
10,000
1,000
100
EQUIVALENT TORQUE Nm
10
100
1000
1500
10000
SPEED RPM
TCAE-R-8
TCAE-R-7
TCAE-R-6
TCAE-R-5
TCAE-R-4
TCAE-R-3
TCAE-R-2
TCAE-R-1

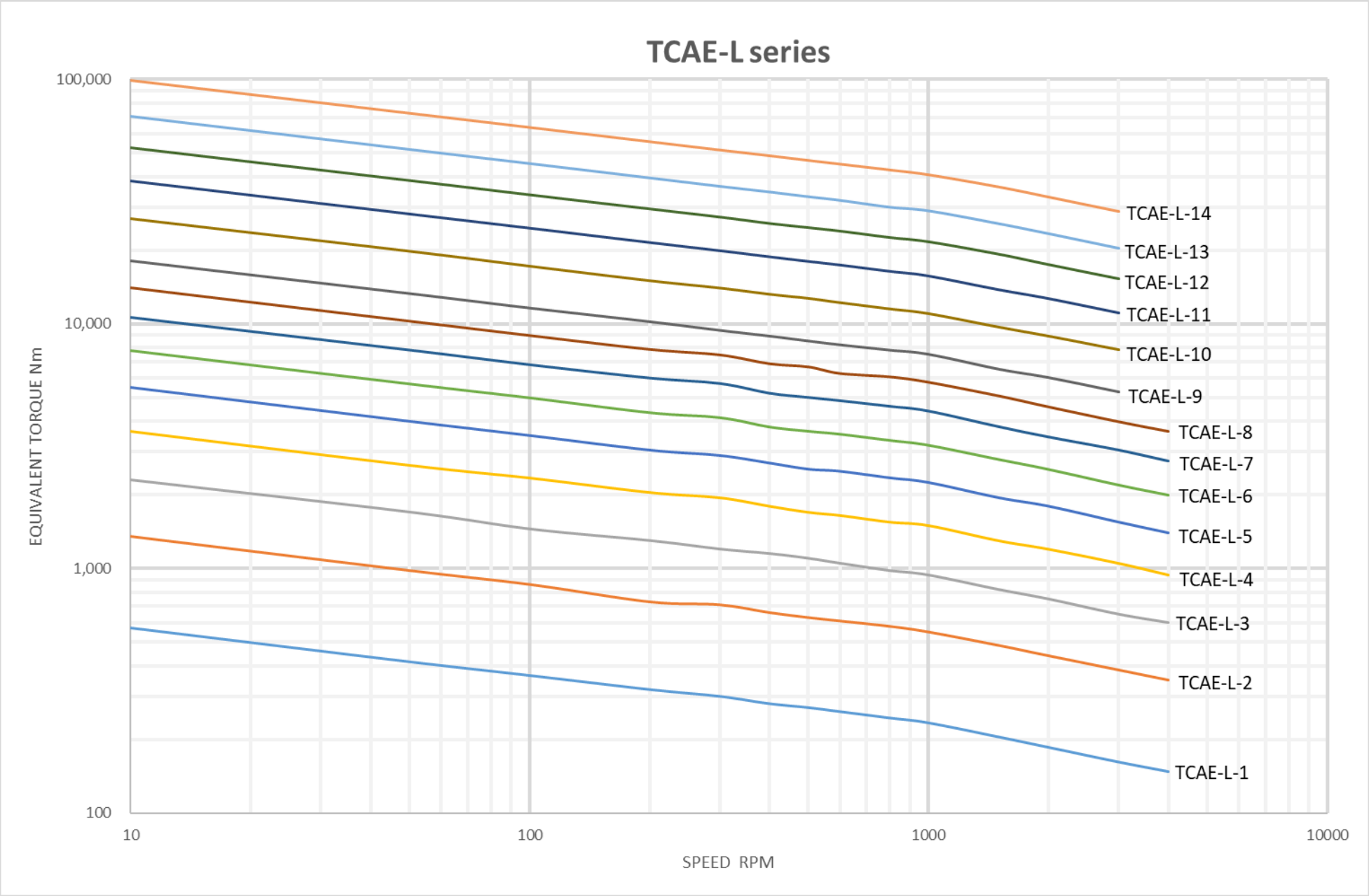
TCAE-L series
100,000
10,000
1,000
100
EQUIVALENT TORQUE Nm
10
100
1000
10000
SPEED RPM
TCAE-L-14
TCAE-L-13
TCAE-L-12
TCAE-L-11
TCAE-L-10
TCAE-L-9
TCAE-L-8
TCAE-L-7
TCAE-L-6
TCAE-L-5
TCAE-L-4
TCAE-L-3
TCAE-L-2
TCAE-L-1

Easy Installation

Quick Release Flanges allow for easy installation and replacement of the TCAE. Simply fix the flanges on the pump and motor shafts (1), compress the TCAE to fit in between (2) and then expand and attach the TCAE (3).

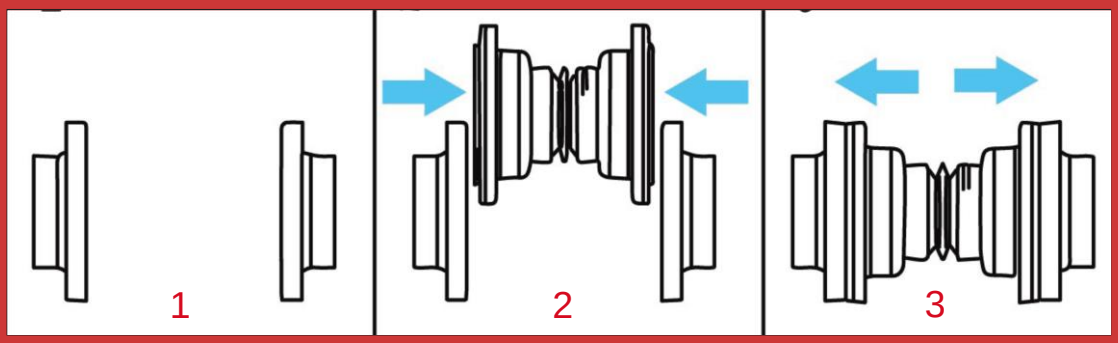

Installation Procedure

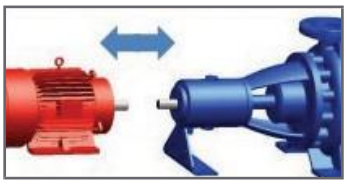

1. If necessary, move the drive / driven device to the correct “end-to-end” shaft distance, in order to fit the TCAE in between.

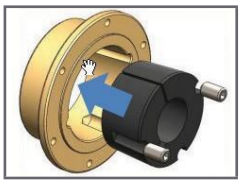

2. Slide the Taper Lock Bush inside the Quick Release Flange. Do not completely tighten the screws from the Taper Lock Bush against the flange. Repeat the operation for the other flange and bush.

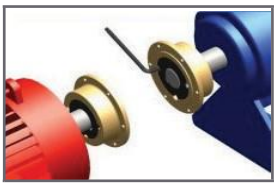

3. Slide both Quick Release Flanges onto both drive and driven device shafts with appropriate shaft keys. For best results, locate flange ends flush with the end of the shaft. Alternatively, at least 50% of the flange should be placed on the shaft. Tighten the Taper Lock Bush screws adequately.

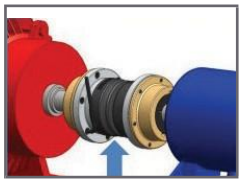

4. If necessary, use a sling to insert the TCAE in a horizontal position. Compressing and expanding the TCAE as necessary, slide it between both flanges. Secure the TCAE to both flanges by tightening the bolts in a diametrically opposite sequence.

Inspection Procedure

1. Visual inspection procedure:
   a. Check for smooth operation with minimal vibration.
   b. Inspect for build-up of contamination on all rotating parts.
   c. Inspect for corrosion on all parts and replace as necessary.

2. Audio inspection procedure:
   a. Assess for unusual vibration and corresponding noise levels.
   b. Listen for unusual noises within the coupling.

3. It is recommended that a routine check be made of the coupling outer surface temperature using a non-contact thermometer (or similar) to detect any abnormal changes in temperature. The surface temperature is a function of conditions such as: ambient temperature, actual running power and speed, operating angle, duty cycle of the driven device and others. As such it is recommended that the coupling temperature be regularly recorded (usually as part of the plant condition monitoring routines). In normal operating environments (ambient up to 35 deg C) a threshold set point temperature of 60 deg C (140 deg F) should be the first warning signal to increase the frequency of subsequent temperature monitoring times. If the temperature is observed to increase significantly in subsequent inspection periods, or if it starts to exceed a temperature of 85 deg C (185 deg F) or more it should be **stopped** and **replaced (see below graph for reference)**.

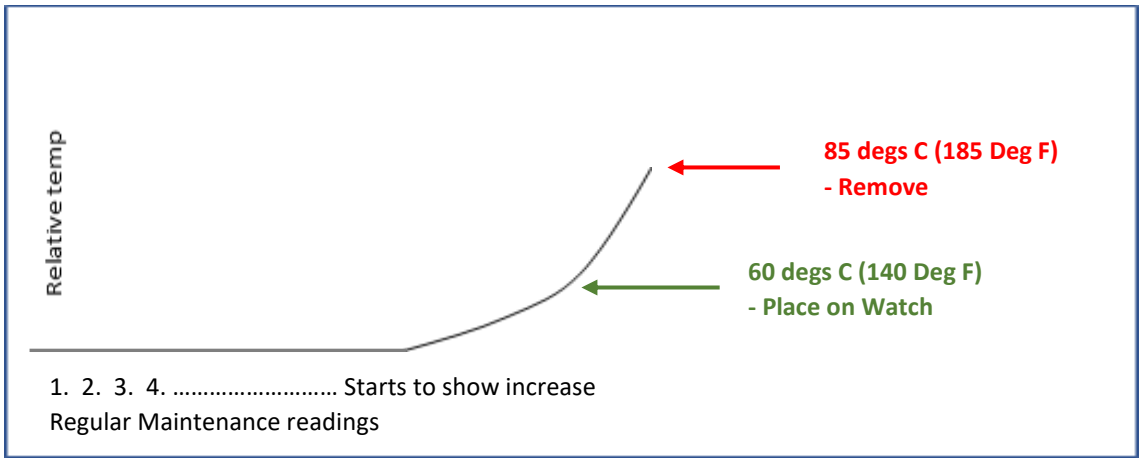

Accreditation

Certification

CERT. NO. 1037

SOUTHPAC certifications

Certificate OF REGISTRATION

Thompson Couplings Limited

3/14 Rodwell Street, Archerfield, QLD 4108, Australia

Has been registered by Southpac Certifications as being compliant with the requirements of:

ISO 9001:2015

This registration covers the Quality Management System for the Provision of Manufacture, Sales and Distribution of Specialist Mechanical Couplings.

Certification Date: 23rd February 2017 | **Certificate Issue Date:** 02nd April 2020
Expiry Date: 02nd April 2023

Andrew Shone - CEO | Southpac Certifications

ISO 9001:2015

Certificate Number Baseefa18ATEX0067U

SGS Baseefa

Issued 18 September 2018
Page 1 of 3

TYPE EXAMINATION CERTIFICATE

Component Intended for use on/in an Equipment or Protective System
Intended for use in Potentially Explosive Atmospheres
Directive 2014/34/EU

3 Type Examination Certificate Number: **Baseefa18ATEX0067U**
4 Product: **TCAE Range of Couplings**
5 Manufacturer: **Thompson Couplings Limited**
6 Address: **3/12 Rodwell St, Archerfield, Brisbane, 4108, Australia**
7 This product and any acceptable variation thereto is specified in the schedule to this certificate and the documents therein referred to.
8 SGS Baseefa certifies that this product has been found to comply with the Essential Health and Safety Requirements relating to the design and construction of products intended for use in potentially explosive atmospheres given in Annex II to Directive 2014/34/EU of the European Parliament and of the Council, dated 26 February 2014.
The examination and test results are recorded in confidential Report No. **18(C)0064**
9 Compliance with the Essential Health and Safety Requirements has been assured by compliance with:
BS EN ISO 80079-36: 2016 **BS EN ISO 80079-37: 2016**
except in respect of those requirements listed at item 18 of the Schedule.
10 The sign "U" is placed after the certificate number. It indicates that this certificate must not be mistaken for a certificate intended for an equipment or protective system. This partial certification may be used as a basis for certification of an equipment or protective system.
11 This TYPE EXAMINATION CERTIFICATE relates only to the design of the specified equipment and not to specific items of equipment subsequently manufactured.
12 The marking of the product shall include the following :
Ex II 2 GD **Ex h IIC Gb**
Ex h IIIC Db

SGS Baseefa Customer Reference No. **7822** Project File No. **18/0064**

SGS Baseefa Limited
Rossmore Business Park, Station Lane,
Buxton, Derbyshire SK17 9RZ
Telephone: +44 (0) 1298 766000 Fax +44 (0) 1298 766001
e-mail: baseefa@sgs.com web site: www.sgs.co.uk/sgsbaseefa
Registered in England No. 4505758.
Registered address: Rossmore Business Park, Ellesmere Port, Cheshire, CH65 3EN

R S SINCLAIR
TECHNICAL MANAGER
On behalf of SGS Baseefa Limited

M POINNEY
Certification Manager

ATEX

ABS

CERTIFICATE OF
Product Design Assessment

THOMPSON COUPLINGS LIMITED
UNIT 3/14 RODWELL ST, ARCHERFIELD, QLD, AUSTRALIA, 4108

ABS

Conformance

Our range of couplings comply with the following standards

a. API 671
b. Conformité Européene (European Conformity)
c. ANSI/AGMA 9000-D11 – Grade 9

Warranty

Thompson Couplings Limited ("**TCL**") warrants, to the original purchaser only, that the delivered product which is the subject of this sale (a) will conform to drawings and specifications mutually established in writing as applicable to the contract, and (b) be free from defects in material or fabrication. The duration of this warranty is one year from date of delivery. If the buyer discovers within this period a failure of the product to conform to drawings or specifications, or a defect in material or fabrication, it must promptly notify **TCL** in writing. In no event shall such notification be received by **TCL** later than 13 months from the date of delivery. Within a reasonable time after such notification, **TCL** will, at its option, (a) correct any failure of the product to conform to drawings, specifications or any defect in material or workmanship, with either replacement or repair of the product, or (b) refund, in part or in whole, the purchase price. Such replacement and repair, excluding charges for labour, is at **TCL**'s expense. All warranty service will be performed at service centres designated by **TCL**. These remedies are the purchaser's exclusive remedies for breach of warranty.

TCL does not warrant **(a)** any product, components or parts not manufactured by **TCL**, **(b)** defects caused by failure to provide a suitable installation environment for the product, **(c)** damage caused by use of the product for purposes other than those for which it was designed, **(d)** damage caused by disasters such as fire, flood, wind, and lightning, **(e)** damage caused by unauthorized attachments or modification, **(f)** any other abuse or misuse by the purchaser, or **(g)** failure of the product due to the installation of an incorrect size or model. The purchaser shall at all times ensure that the size and model installed and used is in accordance with the methodology and calculations as set out in the **TCL** current Brochure. If at any time the purchaser is unsure of what size and model to use, they are to contact **TCL** for confirmation.

THE FOREGOING WARRANTIES ARE IN LIEU OF ALL OTHER WARRANTIES, EXPRESS OR IMPLIED, INCLUDING BUT NOT LIMITED TO THE IMPLIED WARRANTIES OF MERCHANTABILITY AND FITNESS FOR A PARTICULAR PURPOSE.

In no case shall **TCL** be liable for any special, incidental, or consequential damages based upon breach of warranty, breach of contract, negligence, strict tort, or any other legal theory, and in no case shall total liability of **TCL** exceed the purchase price of the part upon which such liability is based. Such damages include, but are not limited to, loss of profits, loss of savings or revenue, loss of use of the product or any associated equipment, cost of capital, cost of any substitute equipment, facilities or services, downtime, the claims of third parties including customers, and injury to property. Some states do not allow limits on warranties, or on remedies for breach in certain transactions. In such states, the limits in this paragraph and in paragraph (2) shall apply to the extent allowable under case law and statutes in such states.

Any action for breach of warranty or any other legal theory must be commenced within 15 months following delivery of the goods.

Unless modified in a writing signed by both parties, this agreement is understood to be the complete and exclusive agreement between the parties, superseding all prior agreements, oral or written, and all other communications between the parties relating to the subject matter of this agreement. No employee of **TCL** or any other party is authorized to make any warranty in addition to those made in this agreement.

This agreement allocates the risks of product failure between **TCL** and the purchaser. This allocation is recognised by both parties and is reflected in the price of the goods. The purchaser acknowledges that it has read this agreement, understands it, and is bound by its terms.

Although care has been taken to assure the accuracy of the data compiled in this catalogue, **TCL** does not assume any liability to any company or person for errors or omissions.

Technical Information and Engineering Data

TCAE-S SERIES : SPECIFICATIONS

PARAMETERS		UNIT	TCAE-S-1	TCAE-S-2	TCAE-S-3	TCAE-S-4	TCAE-S-5	TCAE-S-6	TCAE-S-7
MAXIMUM STATIC TORQUE		N.m	2,212	3,308	4,947	7,398	11,063	16,170	22,187
NOMINAL POWER CAP AT: (Based on machine service factor of 1.25, misaligned angle of 1 degree and service life of 7,200 hours)	1000 RPM	kW	14	28	48	73	120	124	192
	1500 RPM	kW	19	39	67	102	167	172	267
	3000 RPM	kW	34	68	n/a *	n/a *	n/a *	n/a *	n/a *
MAXIMUM MISALIGNMENT ANGLE		Degree °	10	10	10	10	10	10	10
MAXIMUM PARALLEL SHAFT OFFSET		mm	19	25	26	27	36	35	40
MAXIMUM SERVICE TEMPERATURE		°C	100	100	100	100	100	100	100
SERVICE LIFE			As per customer application						
DIMENSION ØA		mm	152	179	215	236	270	244	272
MINIMUM D.B.S.E.		mm	10	10	10	10	10	10	10
DIMENSION L		mm	124	158	166	171	221	216	244
MAXIMUM AXIAL EXPANSION		+/- mm	26	40	40	40	40	37	37
BORE SIZES ØB		mm	30	40	50	55	60	65	65
		inch	1.125	1.5	2.0	2.25	2.375	2.5	2.5
		KEY	8x7	12x8	14x9	16x10	18x11	18x11	18x11

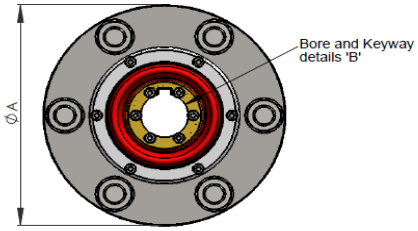

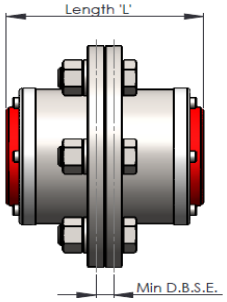

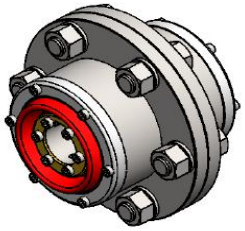

PARAMETERS		UNIT	TCAE-S-8	TCAE-S-9	TCAE-S-10	TCAE-S-11	TCAE-S-12	TCAE-S-13	TCAE-S-14
MAXIMUM STATIC TORQUE		N.m	38,328	60,868	90,856	129,360	177,449	236,190	441,980
NOMINAL POWER CAP AT: (Based on machine service factor of 1.25, misaligned angle of 1 degree and service life of 7,200 hours)	1000 RPM	kW	253	403	591	840	1,161	1,550	1,823 **
	1500 RPM	kW	350	559	n/a *	n/a *	n/a *	n/a *	n/a *
MAXIMUM MISALIGNMENT ANGLE		Degree °	10	10	10	10	10	10	8
MAXIMUM PARALLEL SHAFT OFFSET		mm	53	62	72	75	84	83	70
MAXIMUM SERVICE TEMPERATURE		°C	100	100	100	100	100	100	100
SERVICE LIFE			As per customer application						
DIMENSION ØA		mm	292	336	376	420	462	504	580
MINIMUM D.B.S.E.		mm	10	10	10	10	10	10	10
DIMENSION L		mm	315	371	423	445	491	490	519
MAXIMUM AXIAL EXPANSION		+/- mm	41	41	43	44	46	50	50
BORE SIZES ØB		mm	85	110	125	130	150	170	200
		inch	3.25	4.25	5.0	5.0	6.0	6.5	8.0
		KEY	22x14	28x16	32x18	32x18	36x20	40x22	46x26

* Power Cap. at maximum rated speed available in detailed technical specifications.

** Power Cap. at maximum rated speed of 800 rpm

Thompson Coupling Alignment Eliminator (TCAE-S-1)
Technical Specifications and Details

Max. Static Torque	2,212 Nm	
Nominal Power Cap at (1):	1,000 rpm	14 kW
	1,500 rpm	19 kW
	3,000 rpm (3)	34 kW
Max. Misalignment Angle	+/- 5°	
Max. Parallel Shaft Offset	+/- 6 mm	
L_{10} bearing life (2)	Contact us for your specific application	
Max. Service Temperature	Up to 100°C	
Connection Details	Keyed shaft – max. diameter up to 30mm (key 8x7) (Pilot-bore option available)	
Max Swing Diameter	152 mm	
Overall Length	124 mm	
Distance between Shaft Ends	10mm min	
Axial Expansion	+/- 26 mm	
Weight	4.8 kg (approx.)	
Rotational Moment of Inertia	0.011 kgm^2 (approx.)	

(1) Nominal power capacity shown for different speeds is based on a coupling with a machine service factor of 1.25 operating at 1-degree misaligned angle and operating at 8 hours per day, 25 days per month for 3 years to give a service life of 7,200 hours.
(2) Actual bearing life depends upon a combination of factors. These include equivalent speed, torque and articulated angle. Additionally, shock loads, and environmental conditions may also affect life ratings.
(3) Maximum rated speed.

Notes:

I. The Coupling can be laser aligned when initially installed but as it can handle axial, or parallel, or angular, or combination of any of these in misalignment, it does not need aligning after installation.
II. The coupling does not need maintenance or lubrication once installed.

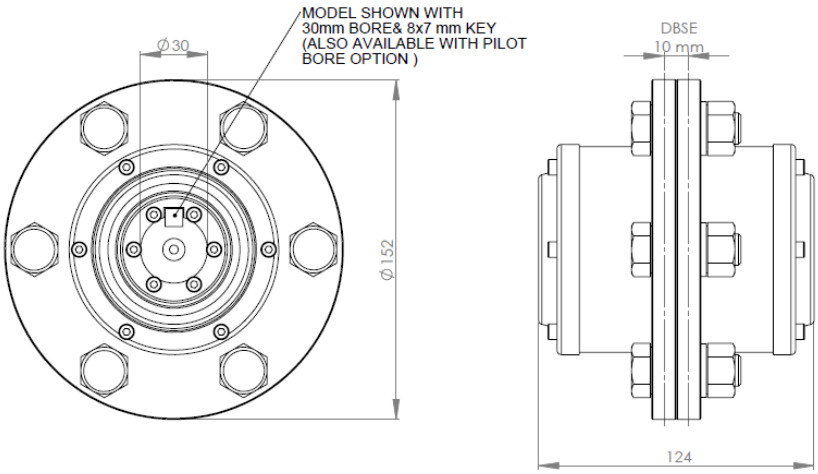

Dimensions and specifications subject to change without notice – Rev.2. Amended 7 Sep 2021

Thompson Coupling Alignment Eliminator (TCAE-S-2)
Technical Specifications and Details

Max. Static Torque	3,308 Nm	
Nominal Power Cap at (1):	1,000 rpm	28 kW
	1,500 rpm	39 kW
	3,000 rpm (3)	68 kW
Max. Misalignment Angle	+/- 5°	
Max. Parallel Shaft Offset	+/- 7 mm	
L_{10} bearing life (2)	Contact us for your specific application	
Max. Service Temperature	Up to 100°C	
Connection Details	Keyed shaft – max. diameter up to 40mm (key 12x8) (Pilot-bore option available)	
Max Swing Diameter	179 mm	
Overall Length	158 mm	
Distance between Shaft Ends	10 mm min	
Axial Expansion	+/- 40 mm	
Weight	8.52 kg (approx.)	
Rotational Moment of Inertia	0.027 kgm^2 (approx.)	

(1) Nominal power capacity shown for different speeds is based on a coupling with a machine service factor of 1.25 operating at 1-degree misaligned angle and operating at 8 hours per day, 25 days per month for 3 years to give a service life of 7,200 hours.
(2) Actual bearing life depends upon a combination of factors. These include equivalent speed, torque and articulated angle. Additionally, shock loads, and environmental conditions may also affect life ratings.
(3) Maximum rated speed.

Notes:

I. The Coupling can be laser aligned when initially installed but as it can handle axial, or parallel, or angular, or combination of any of these in misalignment, it does not need aligning after installation.
II. The coupling does not need maintenance or lubrication once installed.

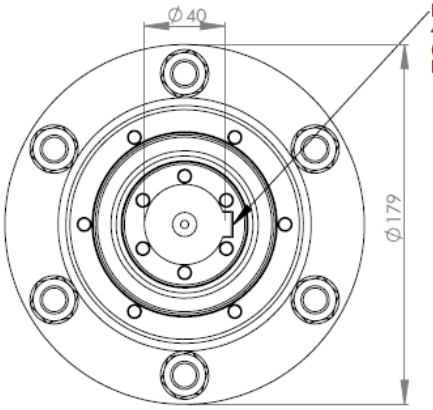

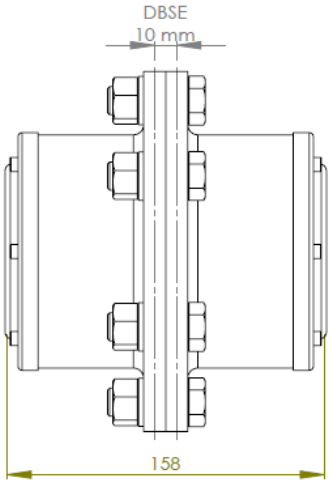

Dimensions and specifications subject to change without notice – Rev.2. Amended 7 Sep 2021

Thompson Coupling Alignment Eliminator (TCAE-S-3)
Technical Specifications and Details

Max. Static Torque	4,947 Nm	
Nominal Power Cap at (1):	1,000 rpm	48 kW
	1,500 rpm	67 kW
	2,500 rpm (3)	102 kW
Max. Misalignment Angle	+/- 5°	
Max. Parallel Shaft Offset	+/- 7 mm	
L_{10} bearing life (2)	Contact us for your specific application	
Max. Service Temperature	Up to 100°C	
Connection Details	Keyed shaft – max. diameter up to 50mm (key 14x9) (Pilot-bore option available)	
Max Swing Diameter	215 mm	
Overall Length	166 mm	
Distance between Shaft Ends	10 mm min	
Axial Expansion	+/- 40 mm	
Weight	14.7 kg (approx.)	
Rotational Moment of Inertia	0.069 kgm² (approx.)	

(1) Nominal power capacity shown for different speeds is based on a coupling with a machine service factor of 1.25 operating at 1-degree misaligned angle and operating at 8 hours per day, 25 days per month for 3 years to give a service life of 7,200 hours.
(2) Actual bearing life depends upon a combination of factors. These include equivalent speed, torque and articulated angle. Additionally, shock loads, and environmental conditions may also affect life ratings.
(3) Maximum rated speed.

Notes:

I. The Coupling can be laser aligned when initially installed but as it can handle axial, or parallel, or angular, or combination of any of these in misalignment, it does not need aligning after installation.
II. The coupling does not need maintenance or lubrication once installed.

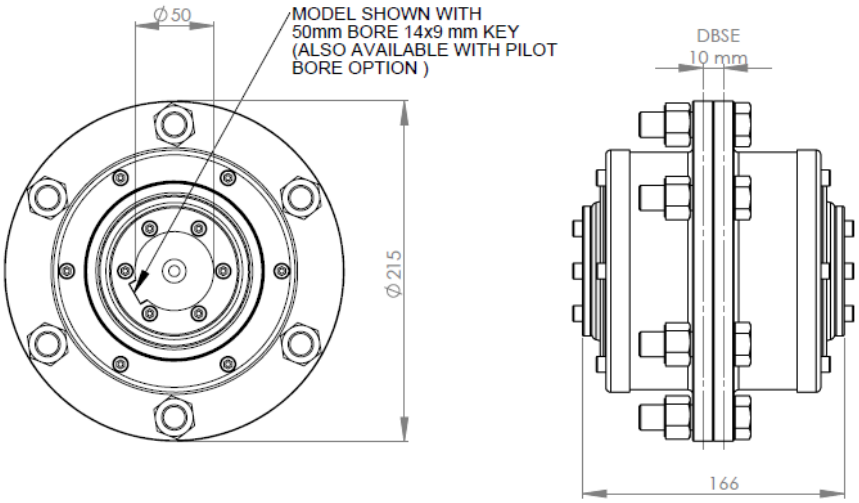

Dimensions and specifications subject to change without notice – Rev.2. Amended 7 Sep 2021

Thompson Coupling Alignment Eliminator (TCAE-S-4)
Technical Specifications and Details

Max. Static Torque	7,398 Nm	
Nominal Power Cap at (1):	1,000 rpm	73 kW
	1,500 rpm	102 kW
	2,500 rpm (3)	154 kW
Max. Misalignment Angle	+/- 5°	
Max. Parallel Shaft Offset	+/- 7 mm	
L_{10} bearing life (2)	Contact us for your specific application	
Max. Service Temperature	Up to 100°C	
Connection Details	Keyed shaft – max. diameter up to 55 mm (key 16x10) (Pilot-bore option available)	
Max Swing Diameter	236 mm	
Overall Length	171 mm	
Distance between Shaft Ends	10 mm min	
Axial Expansion	+/- 40 mm	
Weight	18.0 kg (approx.)	
Rotational Moment of Inertia	0.105 kgm² (approx.)	

(1) Nominal power capacity shown for different speeds is based on a coupling with a machine service factor of 1.25 operating at 1-degree misaligned angle and operating at 8 hours per day, 25 days per month for 3 years to give a service life of 7,200 hours.
(2) Actual bearing life depends upon a combination of factors. These include equivalent speed, torque and articulated angle. Additionally, shock loads, and environmental conditions may also affect life ratings.
(3) Maximum rated speed.

Notes:

I. The Coupling can be laser aligned when initially installed but as it can handle axial, or parallel, or angular, or combination of any of these in misalignment, it does not need aligning after installation.
II. The coupling does not need maintenance or lubrication once installed.

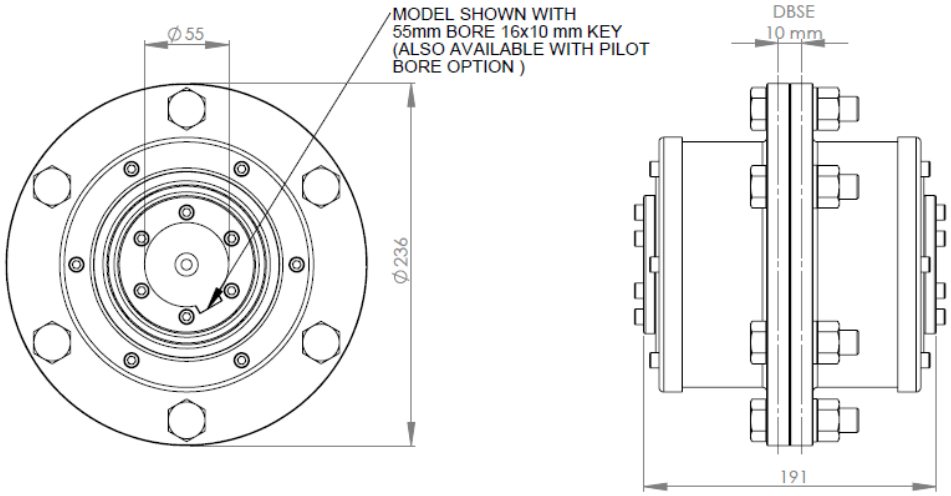

Dimensions and specifications subject to change without notice – Rev.2. Amended 7 Sep 2021

Thompson Coupling Alignment Eliminator (TCAE-S-5)
Technical Specifications and Details

Max. Static Torque	11,063 Nm	
Nominal Power Cap at (1):	1,000 rpm	120 kW
	1,500 rpm	167 kW
	2,500 rpm (3)	252 kW
Max. Misalignment Angle	+/- 5°	
Max. Parallel Shaft Offset	+/- 7 mm	
L_{10} bearing life (2)	Contact us for your specific application	
Max. Service Temperature	Up to 100°C	
Connection Details	Keyed shaft – max. diameter up to 60mm (key 18x11) (Pilot-bore option available)	
Max Swing Diameter	270 mm	
Overall Length	221 mm (approx.)	
Distance between Shaft Ends	10 mm min.	
Axial Expansion	+/- 40 mm	
Weight	33.2 kg (approx.)	
Rotational Moment of Inertia	0.25 kgm² (approx.)	

(1) Nominal power capacity shown for different speeds is based on a coupling with a machine service factor of 1.25 operating at 1-degree misaligned angle and operating at 8 hours per day, 25 days per month for 3 years to give a service life of 7,200 hours.
(2) Actual bearing life depends upon a combination of factors. These include equivalent speed, torque and articulated angle. Additionally, shock loads, and environmental conditions may also affect life ratings.
(3) Maximum rated speed.

Notes:

I. The Coupling can be laser aligned when initially installed but as it can handle axial, or parallel, or angular, or combination of any of these in misalignment, it does not need aligning after installation.
II. The coupling does not need maintenance or lubrication once installed.

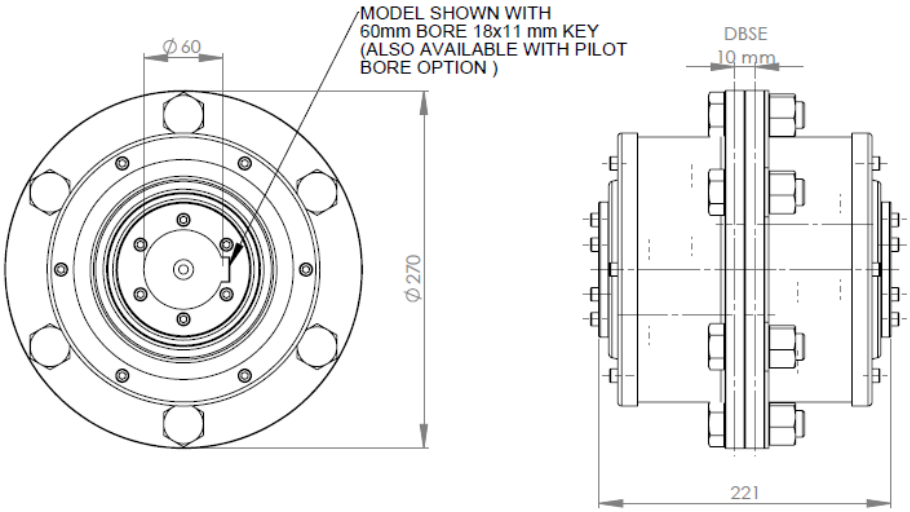

Dimensions and specifications subject to change without notice – Rev.2. Amended 7 Sep 2021

Thompson Coupling Alignment Eliminator (TCAE-S-6)
Technical Specifications and Details

Max. Static Torque	16,170 Nm	
Nominal Power Cap at (1):	1,000 rpm	124 kW
	1,500 rpm	172 kW
	2,200 rpm (3)	235 kW
Max. Misalignment Angle	+/- 5° (10° total across input & output)	
Max. Parallel Shaft Offset	+/- 9 mm	
L_{10} bearing life (2)	Contact us for your specific application	
Max. Service Temperature	Up to 100°C	
Connection Details	Keyed shaft – max. diameter up to 65mm (key 18x11) (Pilot bore option available)	
Swing Diameter	244 mm	
Overall Length	216 mm	
Distance between shaft ends	10 mm	
Axial expansion	+/- 37 mm	
Weight	27.85 kg (approx.)	
Rotational moment of inertia	0.169 kg.m^2 (approx.)	

(1) Nominal power capacity shown for different speeds is based on a coupling with a machine service factor of 1.25 operating at 1-degree misaligned angle and operating at 8 hours per day, 25 days per month for 3 years to give a service life of 7,200 hours.
(2) Actual bearing life depends upon a combination of factors. These include equivalent speed, torque and articulated angle. Additionally, shock loads, and environmental conditions may also affect life ratings.
(3) Maximum rated speed.

Notes:

I. The Coupling can be laser aligned when initially installed but as it can handle axial, or parallel, or angular, or combination of any of these in misalignment, it does not need aligning after installation.
II. The coupling does not need maintenance or lubrication once installed.

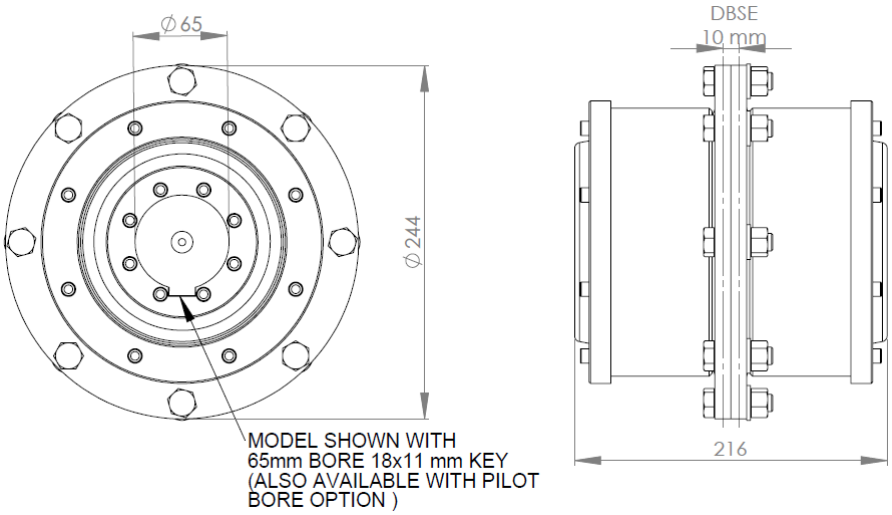

Dimensions and specifications subject to change without notice – Rev.2. Amended 7 Sep 2021

Thompson Coupling Alignment Eliminator (TCAE-S-7)
Technical Specifications and Details

Max. Static Torque	22,187 Nm	
Nominal Power Cap at (1):	1,000 rpm	192 kW
	1,500 rpm	267 kW
	2,000 rpm (3)	336 kW
Max. Misalignment Angle	+/- 5°	
Max. Parallel Shaft Offset	+/- 7 mm	
L_{10} bearing life (2)	Contact us for your specific application	
Max. Service Temperature	Up to 100°C	
Connection Details	Keyed shaft – max. diameter up to 65mm (key 22x14) (Pilot bore option available)	
Mating keyway	To suit customer shaft	
Max Swing Diameter	272 mm	
Overall Length	244 mm	
Distance between shaft ends	10 mm min	
Axial expansion	+/- 37 mm	
Weight	37.3 kgs (approx.)	
Rotational moment of inertia	0.275 kg.m^2 (approx.)	

(1) Nominal power capacity shown for different speeds is based on a coupling with a machine service factor of 1.25 operating at 1-degree misaligned angle and operating at 8 hours per day, 25 days per month for 3 years to give a service life of 7,200 hours.
(2) Actual bearing life depends upon a combination of factors. These include equivalent speed, torque and articulated angle. Additionally, shock loads, and environmental conditions may also affect life ratings.
(3) Maximum rated speed.

Notes:

I. The Coupling can be laser aligned when initially installed but as it can handle axial, or parallel, or angular, or combination of any of these in misalignment, it does not need aligning after installation.
II. The coupling does not need maintenance or lubrication once installed.

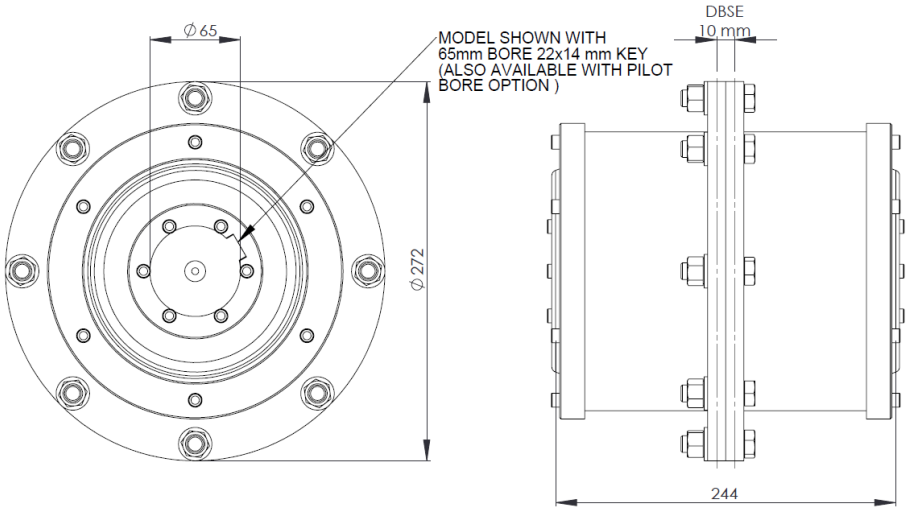

Dimensions and specifications subject to change without notice – Rev.2. Amended 7 Sep 2021

Thompson Coupling Alignment Eliminator (TCAE-S-8)
Technical Specifications and Details

Max. Static Torque	38,328 Nm	
Nominal Power Cap at (1):	1,000 rpm	253 kW
	1,500 rpm	350 kW
	1,800 rpm (3)	406 kW
Max. Misalignment Angle	+/- 5°	
Max. Parallel Shaft Offset	+/- 9 mm	
L_{10} bearing life (2)	Contact us for your specific application	
Max. Service Temperature	Up to 100°C	
Connection Details	Keyed shaft – max. diameter up to 85mm (key 22x14) (Pilot bore option available)	
Swing Diameter	292 mm	
Overall Length	315 mm	
Distance between shaft ends	10 mm min.	
Allowable axial expansion	+/- 41 mm	
Weight	52.0 kgs (approx.)	
Rotational moment of inertia	0.472 kgm^2 (approx.)	

(1) Nominal power capacity shown for different speeds is based on a coupling with a machine service factor of 1.25 operating at 1-degree misaligned angle and operating at 8 hours per day, 25 days per month for 3 years to give a service life of 7,200 hours.
(2) Actual bearing life depends upon a combination of factors. These include equivalent speed, torque and articulated angle. Additionally, shock loads, and environmental conditions may also affect life ratings.
(3) Maximum rated speed.

Notes:

I. The Coupling can be laser aligned when initially installed but as it can handle axial, or parallel, or angular, or combination of any of these in misalignment, it does not need aligning after installation.
II. The coupling does not need maintenance or lubrication once installed.

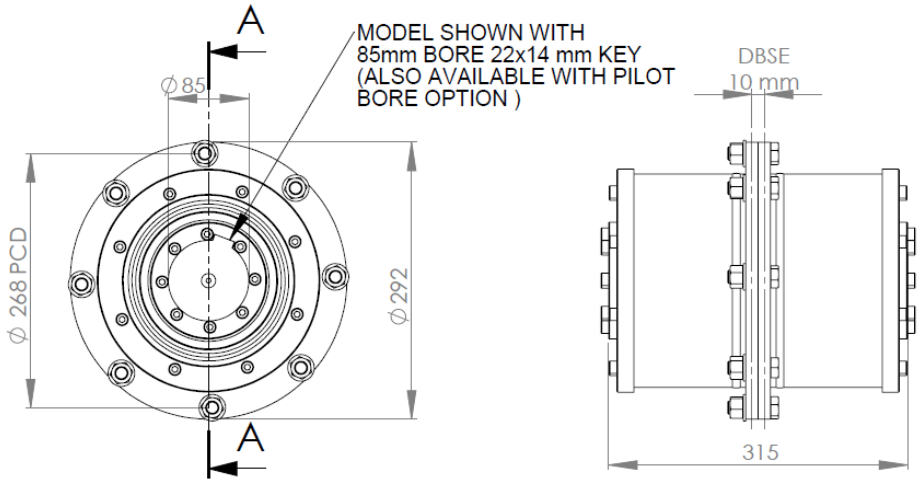

Dimensions and specifications subject to change without notice – Rev.3. Amended 7 Sep 2021

Thompson Coupling Alignment Eliminator (TCAE-S-9)
Technical Specifications and Details

Max. Static Torque	60,868 Nm	
Nominal Power Cap at (1):	1,000 rpm	403 kW
	1,500 rpm	559 kW
	1,600 rpm (3)	589 kW
Max. Misalignment Angle	+/- 5°	
Max. Parallel Shaft Offset	+/- 7mm	
L_{10} bearing life (2)	Contact us for your specific application	
Max. Service Temperature	Up to 100°C	
Connection Details	Keyed shaft – max. diameter up to 110mm (key 28x16)	
Max Swing Diameter	336 mm	
Overall Length	371 mm	
Distance between Shaft Ends	10 mm min.	
Axial Expansion	+/- 41 mm	
Weight	80.0 kg (approx.)	
Rotational Moment of Inertia	0.934 kgm^2 (approx.)	

(1) Nominal power capacity shown for different speeds is based on a coupling with a machine service factor of 1.25 operating at 1-degree misaligned angle and operating at 8 hours per day, 25 days per month for 3 years to give a service life of 7,200 hours.
(2) Actual bearing life depends upon a combination of factors. These include equivalent speed, torque and articulated angle. Additionally, shock loads, and environmental conditions may also affect life ratings.
(3) Maximum rated speed.

Notes:

I. The Coupling can be laser aligned when initially installed but as it can handle axial, or parallel, or angular, or combination of any of these in misalignment, it does not need aligning after installation.
II. The coupling does not need maintenance or lubrication once installed.

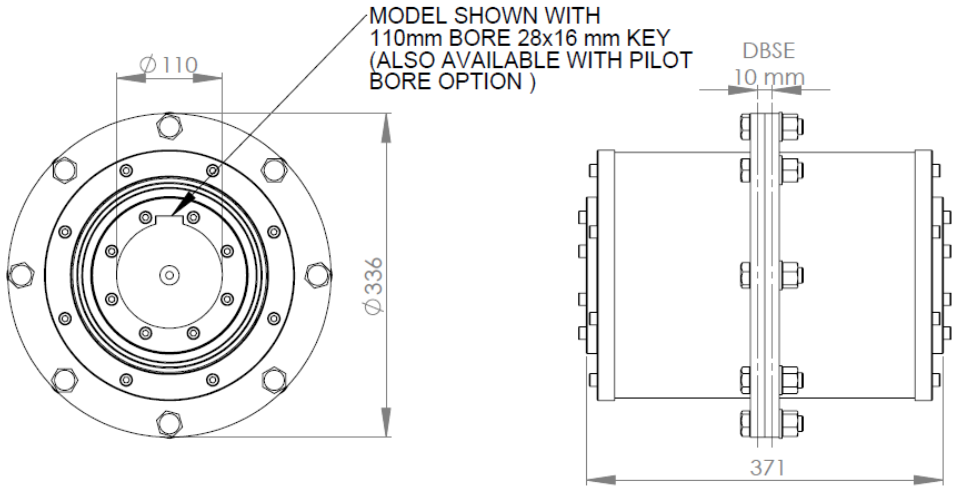

Dimensions and specifications subject to change without notice – Rev.3. Amended 7 Sep 2021

Thompson Coupling Alignment Eliminator (TCAE-S-10)
Technical Specifications and Details

Max. Static Torque	90,856 Nm	
Nominal Power Cap at (1):	1,000 rpm	591 kW
	1,500 rpm (3)	730 kW
Max. Misalignment Angle	+/- 5°	
Max. Parallel Shaft Offset	+/- 7mm	
L_{10} bearing life (2)	Contact us for your specific application	
Max. Service Temperature	Up to 100°C	
Connection Details	Keyed shaft – max. diameter 125mm (key 32x18) (Pilot bore option available)	
Max Swing Diameter	376 mm	
Overall Length	423 mm	
Distance between Shaft Ends	10 mm min.	
Axial Expansion	+/- 43 mm	
Weight	113.2 kg (approx.)	
Rotational Moment of Inertia	1.898 kgm^2 (approx.)	

(1) Nominal power capacity shown for different speeds is based on a coupling with a machine service factor of 1.25 operating at 1-degree misaligned angle and operating at 8 hours per day, 25 days per month for 3 years to give a service life of 7,200 hours.
(2) Actual bearing life depends upon a combination of factors. These include equivalent speed, torque and articulated angle. Additionally, shock loads, and environmental conditions may also affect life ratings.
(3) Maximum rated speed.

Notes:

I. The Coupling can be laser aligned when initially installed but as it can handle axial, or parallel, or angular, or combination of any of these in misalignment, it does not need aligning after installation.
II. The coupling does not need maintenance or lubrication once installed.

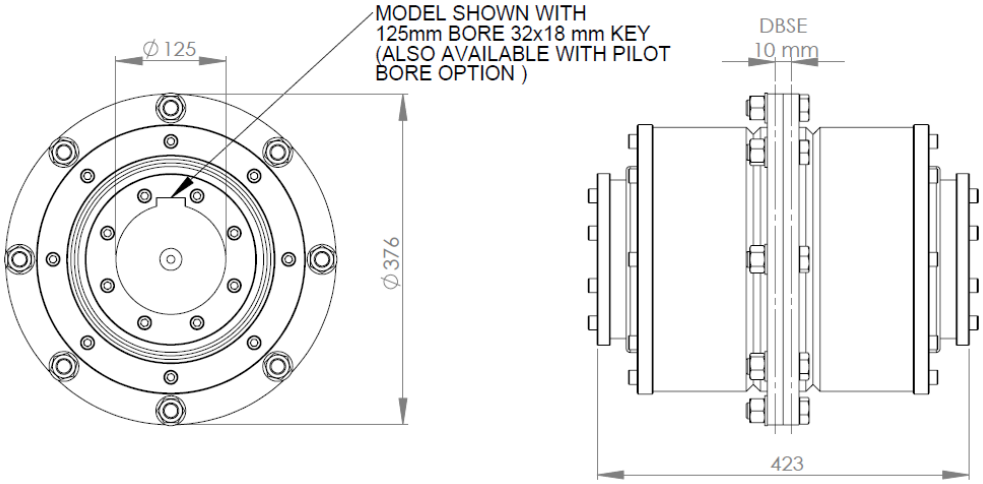

Dimensions and specifications subject to change without notice – Rev.2. Amended 7 Sep 2021

Thompson Coupling Alignment Eliminator (TCAE-S-11)
Technical Specifications and Details

Max. Static Torque	129,360 Nm	
Nominal Power Cap at (1):	1,000 rpm	840 kW
	1,200 rpm (3)	973 kW
Max. Misalignment Angle	+/- 5°	
Max. Parallel Shaft Offset	+/- 7mm	
L_{10} Bearing Life (1)	Contact us for your specific application	
Max. Service Temperature	Up to 100 °C	
Connection Details	Keyed shaft – max. diameter 130mm (key 32x18) (Pilot bore option available)	
Max Swing Diameter	420 mm	
Overall Length	445 mm	
Distance between Shaft Ends	10 mm min.	
Axial Expansion	+/- 44 mm	
Weight	119.8 kg (approx.)	
Rotational Moment of Inertia	2.175 kgm^2 (approx.)	

(1) Nominal power capacity shown for different speeds is based on a coupling with a machine service factor of 1.25 operating at 1-degree misaligned angle and operating at 8 hours per day, 25 days per month for 3 years to give a service life of 7,200 hours.
(2) Actual bearing life depends upon a combination of factors. These include equivalent speed, torque and articulated angle. Additionally, shock loads, and environmental conditions may also affect life ratings.
(3) Maximum rated speed.

Notes:

I. The Coupling can be laser aligned when initially installed but as it can handle axial, or parallel, or angular, or combination of any of these in misalignment, it does not need aligning after installation.
II. The coupling does not need maintenance or lubrication once installed.

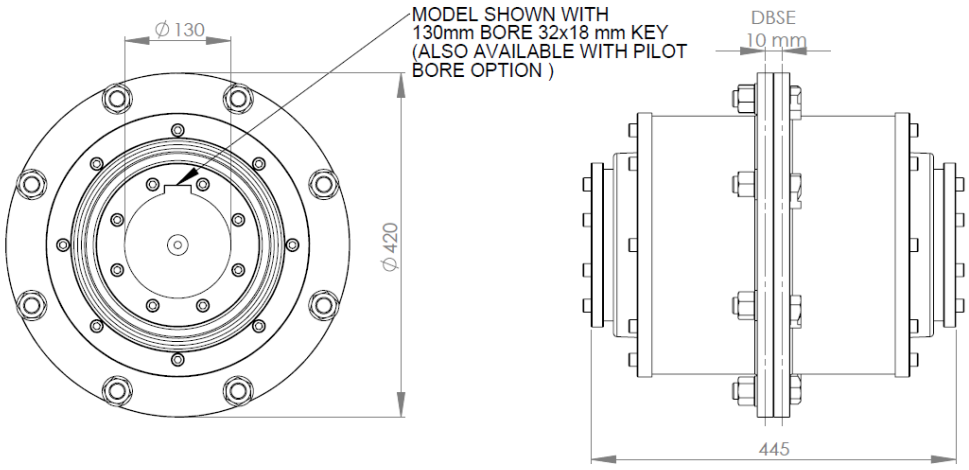

Dimensions and specifications subject to change without notice – Rev.3. Amended 7 Sep 2021

Thompson Coupling Alignment Eliminator (TCAE-S-12)
Technical Specifications and Details

Max. Static Torque	177,449 Nm	
	1,000 rpm	1,161 kW
	1,100 rpm (3)	1,254 kW
Max. Misalignment Angle	+/- 5°	
Max. Parallel Shaft Offset	+/- 9 mm	
L_{10} bearing life (2)	Contact us for your specific application	
Max. Service Temperature	Up to 100°C	
Connection Details	Keyed shaft – max. diameter up to 150mm (key 36x20) (Pilot-bore option available)	
Max Swing Diameter	462 mm	
Overall Length	491 mm	
Distance between Shaft Ends	10 mm min.	
Axial Expansion	+/- 46 mm	
Weight	172.9 kg (approx.)	
Rotational Moment of Inertia	4.074 kgm^2 (approx.)	

(1) Nominal power capacity shown for different speeds is based on a coupling with a machine service factor of 1.25 operating at 1-degree misaligned angle and operating at 8 hours per day, 25 days per month for 3 years to give a service life of 7,200 hours.
(2) Actual bearing life depends upon a combination of factors. These include equivalent speed, torque and articulated angle. Additionally, shock loads, and environmental conditions may also affect life ratings.
(3) Maximum rated speed.

Notes:

I. The Coupling can be laser aligned when initially installed but as it can handle axial, or parallel, or angular, or combination of any of these in misalignment, it does not need aligning after installation.
II. The coupling does not need maintenance or lubrication once installed.

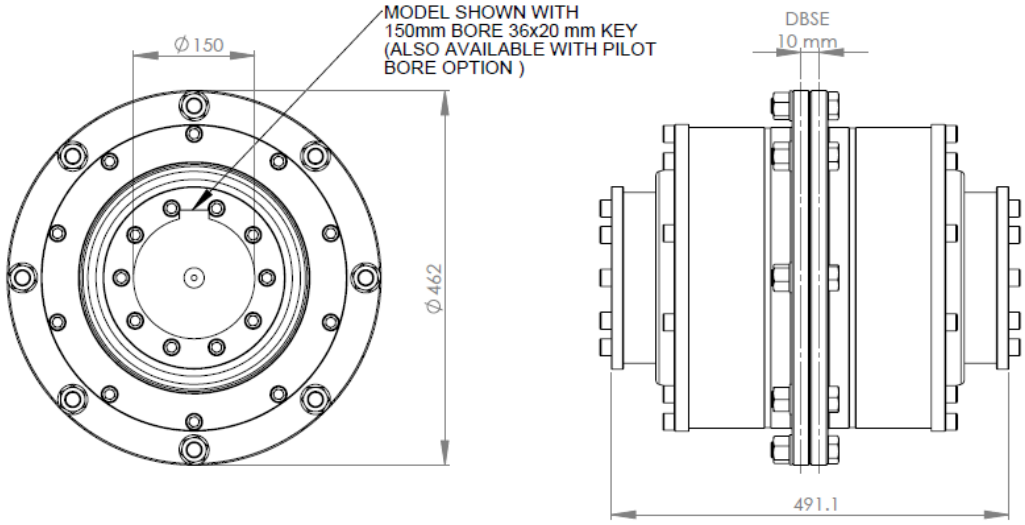

Dimensions and specifications subject to change without notice – Rev.3. Amended 7 Sep 2021

Thompson Coupling Alignment Eliminator (TCAE-S-13)
Technical Specifications and Details

Max. Static Torque	236,190 Nm	
Nominal Power Cap at (1):	1,000 rpm (3)	1,550 kW
Max. Misalignment Angle	+/- 5	
Max. Parallel Shaft Offset	+/- 11mm	
L_{10} bearing life (2)	Contact us for your specific application	
Max. Service Temperature	Up to 100°C	
Connection Details	Keyed shaft – max. diameter up to 170mm (key 40x22) (Pilot bore option available)	
Max Swing Diameter	504 mm	
Overall Length	490 mm min.	
Distance between Shaft Ends	10 mm min.	
Axial Expansion	+/- 50 mm	
Weight	214 kg (approx.)	
Rotational Moment of Inertia	5.835 kgm^2	

(1) Nominal power capacity shown for different speeds is based on a coupling with a machine service factor of 1.25 operating at 1-degree misaligned angle and operating at 8 hours per day, 25 days per month for 3 years to give a service life of 7,200 hours.
(2) Actual bearing life depends upon a combination of factors. These include equivalent speed, torque and articulated angle. Additionally, shock loads, and environmental conditions may also affect life ratings.
(3) Maximum rated speed.

Notes:

I. The Coupling can be laser aligned when initially installed but as it can handle axial, or parallel, or angular, or combination of any of these in misalignment, it does not need aligning after installation.
II. The coupling does not need maintenance or lubrication once installed.

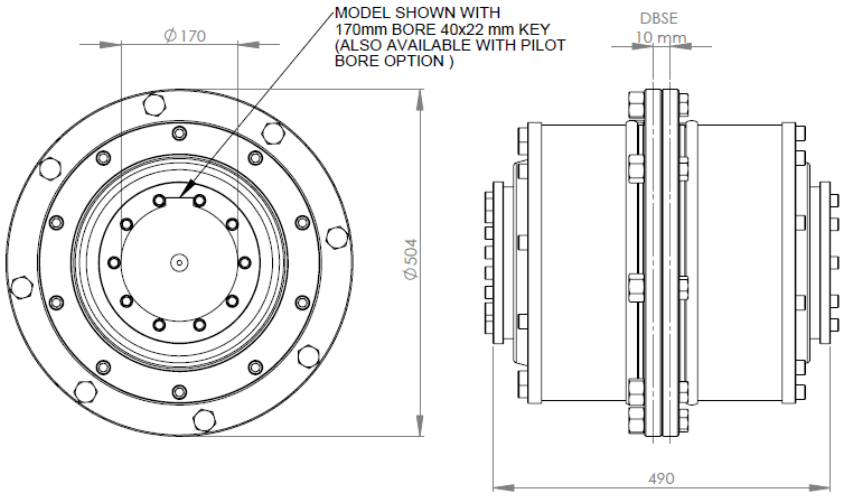

Dimensions and specifications subject to change without notice – Rev.2. Amended 7 Sep 2021

Thompson Coupling Alignment Eliminator (TCAE-S-14)
Technical Specifications and Details

Max. Static Torque	441,980 Nm	
Nominal Power Cap at (1):	800 rpm (3)	1,823 kW
Max. Misalignment Angle	+/- 4°	
Max. Parallel Shaft Offset	+/- 11mm	
L_{10} bearing life (2)	Contact us for your specific application	
Max. Service Temperature	Up to 100°C	
Connection Details	Keyed shaft – max. diameter up to 200 mm (key 46x25) (Pilot bore option available)	
Max Swing Diameter	580 mm	
Overall Length	519 mm	
Distance between Shaft Ends	10 mm min.	
Axial Expansion	+/- 50 mm	
Weight	285.2 kg (approx.)	
Rotational Moment of Inertia	9.132 kgm^2	

(1) Nominal power capacity shown for different speeds is based on a coupling with a machine service factor of 1.25 operating at 1-degree misaligned angle and operating at 8 hours per day, 25 days per month for 3 years to give a service life of 7,200 hours.
(2) Actual bearing life depends upon a combination of factors. These include equivalent speed, torque and articulated angle. Additionally, shock loads, and environmental conditions may also affect life ratings.
(3) Maximum rated speed.

Notes:

I. The Coupling can be laser aligned when initially installed but as it can handle axial, or parallel, or angular, or combination of any of these in misalignment, it does not need aligning after installation.
II. The coupling does not need maintenance or lubrication once installed.

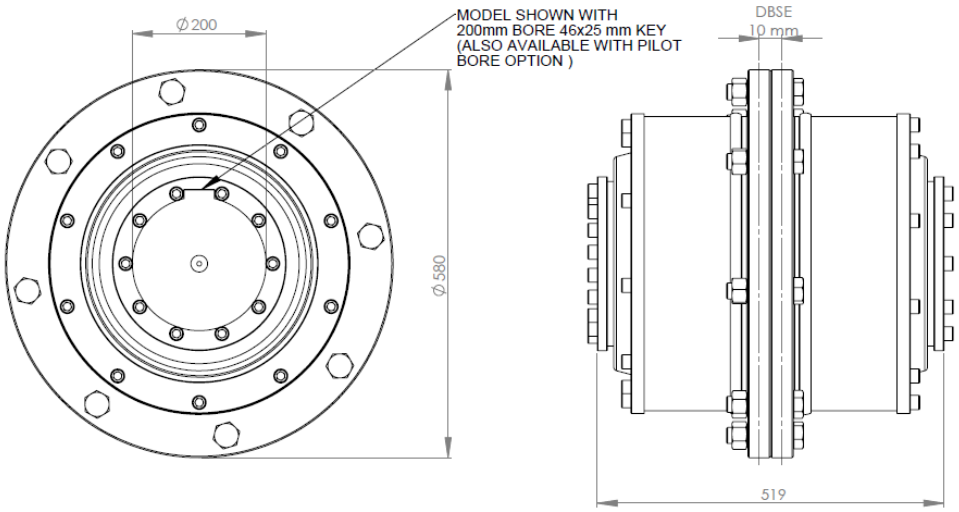

Dimensions and specifications subject to change without notice – Rev.2. Amended 7 Sep 2021

TCAE-V SERIES : SPECIFICATIONS

PARAMETERS		UNIT	TCAE-V-00	TCAE-V-0	TCAE-V-1	TCAE-V-2	TCAE-V-3	TCAE-V-4	TCAE-V-5
MAXIMUM STATIC TORQUE		N.m	1,519	2,499	3,724	5,782	11,368	15,680	23,912
NOMINAL POWER CAP AT: (Based on machine service factor of 1.25, misaligned angle of 1 degree and service life of 7,200 hours)	1000 RPM	kW	6	9	13	26	45	68	116
	1500 RPM	kW	8	12	18	37	n/a *	n/a *	n/a *
	3000 RPM	kW	14	n/a *	n/a *	n/a *	n/a *	n/a *	n/a *
MAXIMUM MISALIGNMENT ANGLE		Degree °	5	5	5	5	5	5	5
MAXIMUM PARALLEL SHAFT OFFSET		mm	4	5	5	7	8	9	11
MAXIMUM SERVICE TEMPERATURE		°C	100	100	100	100	100	100	100
SERVICE LIFE			As per customer application						
DIMENSION ØA		mm	118	134	152	177	215	236	270
DIMENSION B NOMINAL D.B.S.E. (RANGE)		mm	77 (74 to 80)	88 (84 to 92)	102 (96 to 108)	123 (117 to 129)	148 (140 to 156)	170 (162 to 178)	204 (196 to 212)
MAXIMUM AXIAL EXPANSION		+/- mm	3	4	6	6	8	8	8
BORE SIZES ØB		mm	14 to 50	14 to 50	16 to 65	16 to 65	25 to 75	35 to 100	35 to 100
		inch	0.55 to 2.00	0.55 to 2.00	0.625 to 2.5	0.625 to 2.5	1.00 to 3.00	1.50 to 4.00	1.50 to 4.00

* Taper Lock Bush sold separately
* Quick Release Flange sold separately

COUPLING ONLY

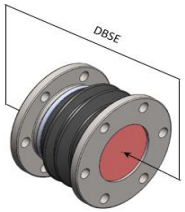

COUPLING WITH QUICK RELEASE FLANGES AND BUSHES

TCAE-V SERIES : SPECIFICATIONS

PARAMETERS		UNIT	TCAE-V-6	TCAE-V-7	TCAE-V-8	TCAE-V-9	TCAE-V-10	TCAE-V-11	TCAE-V-12	TCAE-V-13	TCAE-V-14
MAXIMUM STATIC TORQUE		N.m	40,000	53,200	110,600	151,900	210,000	350,000	437,500	721,000	1,015,000
NOMINAL POWER CAP AT: (Based on machine service factor of 1.25, misaligned angle of 1 degree and service life of 7,200 hours)	1000 RPM	kW	201	268	549	757	1,042	1,264	2,168	3,597	4651 **
	1500 RPM	kW	278	372	762	1,050	n/a *	n/a *	n/a *	n/a *	n/a *
MAXIMUM MISALIGNMENT ANGLE		Degree °	5	5	5	5	5	5	5	5	5
MAXIMUM PARALLEL SHAFT OFFSET		mm	21	25	32	35	39	42	45	48	52
MAXIMUM SERVICE TEMPERATURE		°C	100	100	100	100	100	100	100	100	100
SERVICE LIFE			As per customer application								
DIMENSION ØA		mm	225	250	300	350	390	440	490	550	625
DIMENSION B NOMINAL D.B.S.E. (RANGE)		mm	272 (249 to 295)	310 (279 to 341)	388 (362 to 414)	416 (377 to 455)	466 (423 to 509)	502 (455 to 549)	528 (476 to 580)	558 (506 to 610)	608 (551 to 665)
MAXIMUM AXIAL EXPANSION		+/- mm	23	31	26	39	43	47	52	52	57
BORE SIZES ØB			Pilot-Bored Flanges								

- Taper Lock Bush sold separately
- Flanges sold separately

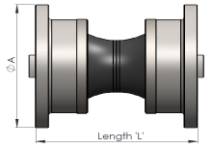

COUPLING ONLY

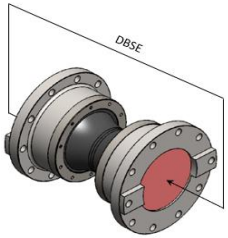

COUPLING WITH PILOT-BORED FLAGES

* Power Cap. at maximum rated speed available in detailed technical specifications.
** Power Cap. at maximum rated speed of 800 rpm

Thompson Coupling Alignment Eliminator (TCAE-V-00)
Technical Specifications and Details

Max. Static Torque	1,519 Nm	
Nominal Power Cap at (1):	1,000 rpm	6 kW
	1,500 rpm	8 kW
	3,000 rpm (3)	14 kW
Max. Misalignment Angle	+/- 5°	
Max. Parallel Shaft Offset	+/- 5 mm	
L_{10} bearing life (2)	Contact us for your specific application	
Max. Service Temperature	Up to 100°C	
Connection Details	Keyed shaft via taper lock bush #1615. Shaft size range 14mm - 42mm (0.55” – 1.65”)	
Max Swing Diameter	118 mm	
Distance between Shaft Ends	77 (74 – 80) mm	
Axial Expansion	+/- 3 mm	
Weight	2.0 kg (excluding flanges)	

(1) Nominal power capacity shown for different speeds is based on a coupling with a machine service factor of 1.25 operating at 1-degree misaligned angle and operating at 8 hours per day, 25 days per month for 3 years to give a service life of 7,200 hours.
(2) Actual bearing life depends upon a combination of factors. These include equivalent speed, torque and articulated angle. Additionally, shock loads, and environmental conditions may also affect life ratings.
(3) Maximum rated speed

Notes:

I. The Coupling can be laser aligned when initially installed but as it can handle axial, or parallel, or angular, or combination of any of these in misalignment, it does not need aligning after installation.
II. The coupling does not need maintenance or lubrication once installed.

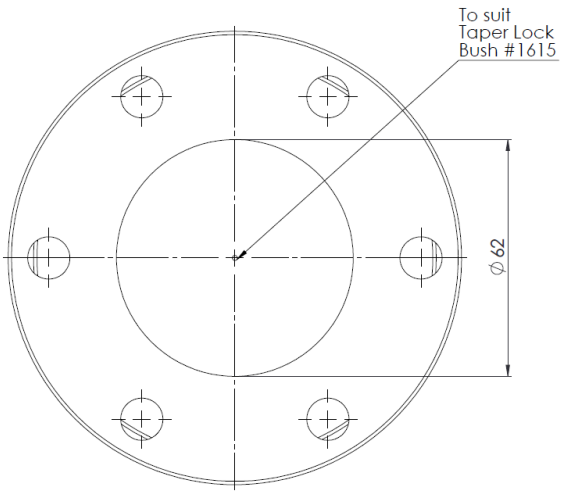

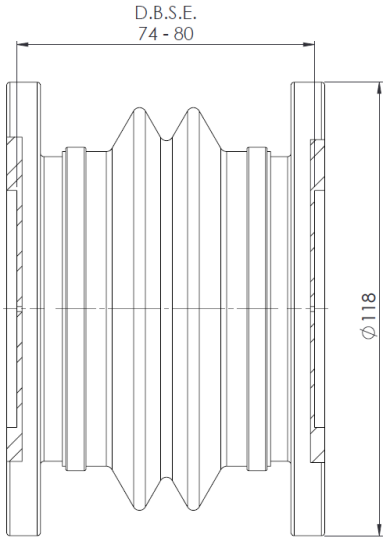

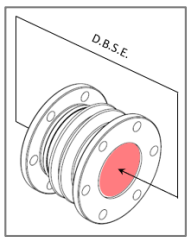

Dimensions and specifications subject to change without notice – Rev.2. Amended 7 Sep 2021

Thompson Coupling Alignment Eliminator (TCAE-V-0)
Technical Specifications and Details

Max. Static Torque	2,499 Nm	
Nominal Power Cap at (1):	1,000 rpm	9 kW
	1,500 rpm	12 kW
	2,000 rpm (3)	16 kW
Max. Misalignment Angle	+/- 5°	
Max. Parallel Shaft Offset	+/- 5 mm	
L_{10} bearing life (2)	Contact us for your specific application	
Max. Service Temperature	Up to 100°C	
Connection Details	Keyed shaft via taper lock bush #1615. Shaft size range 14mm - 42mm (0.55" – 1.65")	
Max Swing Diameter	134 mm	
Distance between Shaft Ends	88 (84 – 92) mm	
Axial Expansion	+/- 4 mm	
Weight	3.0 kg (excluding flanges)	

(1) Nominal power capacity shown for different speeds is based on a coupling with a machine service factor of 1.25 operating at 1-degree misaligned angle and operating at 8 hours per day, 25 days per month for 3 years to give a service life of 7,200 hours.
(2) Actual bearing life depends upon a combination of factors. These include equivalent speed, torque and articulated angle. Additionally, shock loads, and environmental conditions may also affect life ratings.
(3) Maximum rated speed

Notes:

I. The Coupling can be laser aligned when initially installed but as it can handle axial, or parallel, or angular, or combination of any of these in misalignment, it does not need aligning after installation.
II. The coupling does not need maintenance or lubrication once installed.

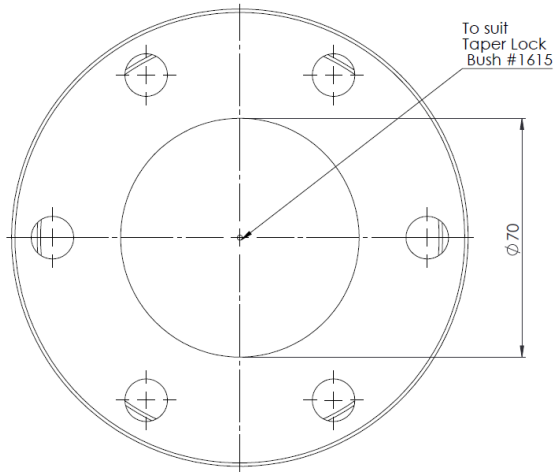

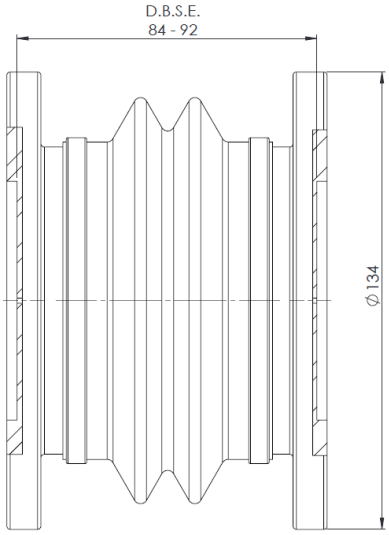

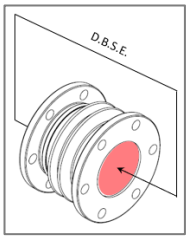

Dimensions and specifications subject to change without notice – Rev.2. Amended 7 Sep 2021

Thompson Coupling Alignment Eliminator (TCAE-V-1)
Technical Specifications and Details

Max. Static Torque	3,724 Nm	
Nominal Power Cap at (1):	1,000 rpm	13 kW
	1,500 rpm	18 kW
	1,800 rpm (3)	21 kW
Max. Misalignment Angle	+/- 5°	
Max. Parallel Shaft Offset	+/- 5 mm	
L_{10} bearing life (2)	Contact us for your specific application	
Max. Service Temperature	Up to 100°C	
Connection Details	Keyed shaft via taper lock bush #2517. Shaft size range 16mm - 65mm (0.625" – 2.50")	
Max Swing Diameter	152 mm	
Distance between Shaft Ends	102 (96 – 108) mm	
Axial Expansion	+/- 6 mm	
Weight	4.4 kg (excluding flanges)	

(1) Nominal power capacity shown for different speeds is based on a coupling with a machine service factor of 1.25 operating at 1-degree misaligned angle and operating at 8 hours per day, 25 days per month for 3 years to give a service life of 7,200 hours.
(2) Actual bearing life depends upon a combination of factors. These include equivalent speed, torque and articulated angle. Additionally, shock loads, and environmental conditions may also affect life ratings.
(3) Maximum rated speed.

Notes:

I. The Coupling can be laser aligned when initially installed but as it can handle axial, or parallel, or angular, or combination of any of these in misalignment, it does not need aligning after installation.
II. The coupling does not need maintenance or lubrication once installed.

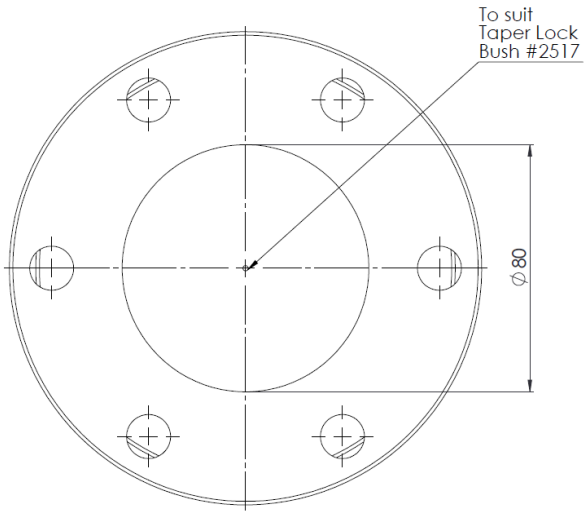

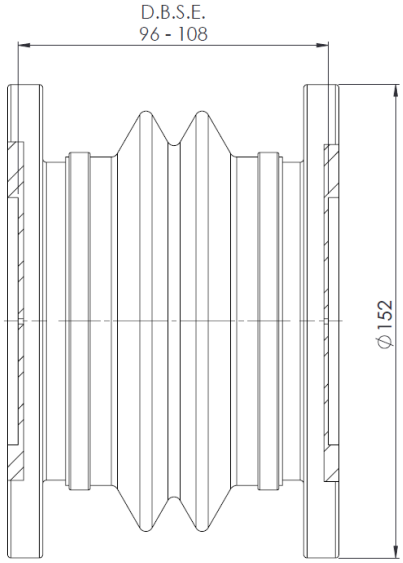

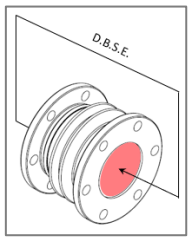

Dimensions and specifications subject to change without notice – Rev.2. Amended 7 Sep 2021

Thompson Coupling Alignment Eliminator (TCAE-V-2)
Technical Specifications and Details

Max. Static Torque	5,782 Nm	
Nominal Power Cap at (1):	1,000 rpm	26 kW
	1,500 rpm (3)	37 kW
Max. Misalignment Angle	+/- 5°	
Max. Parallel Shaft Offset	+/- 7 mm	
L_{10} bearing life (2)	Contact us for your specific application	
Max. Service Temperature	Up to 100°C	
Connection Details	Keyed shaft via taper lock bush #2517. Shaft size range 16mm - 65mm (0.625" – 2.50")	
Max Swing Diameter	177 mm	
Distance between Shaft Ends	123 (117 – 129) mm	
Axial Expansion	+/- 6 mm	
Weight	7.3 kg (excluding flanges)	

(1) Nominal power capacity shown for different speeds is based on a coupling with a machine service factor of 1.25 operating at 1-degree misaligned angle and operating at 8 hours per day, 25 days per month for 3 years to give a service life of 7,200 hours.
(2) Actual bearing life depends upon a combination of factors. These include equivalent speed, torque and articulated angle. Additionally, shock loads, and environmental conditions may also affect life ratings.
(3) Maximum rated speed.

Notes:

I. The Coupling can be laser aligned when initially installed but as it can handle axial, or parallel, or angular, or combination of any of these in misalignment, it does not need aligning after installation.
II. The coupling does not need maintenance or lubrication once installed.

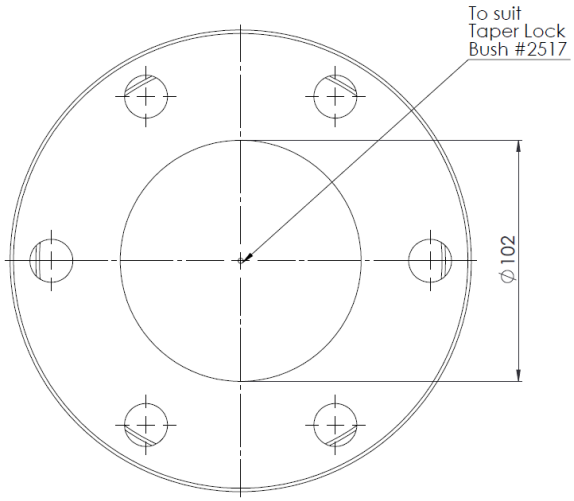

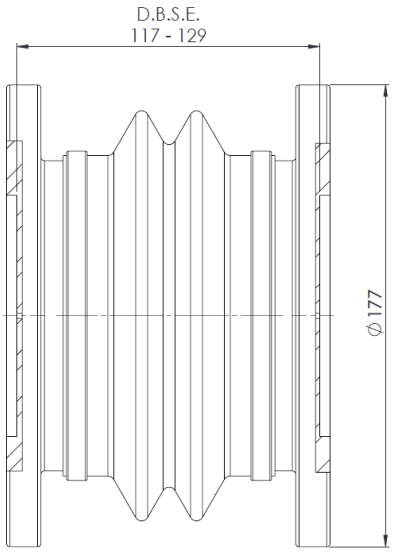

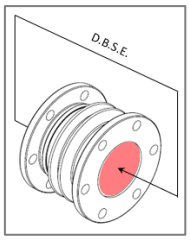

Dimensions and specifications subject to change without notice – Rev.2. Amended 7 Sep 2021

Thompson Coupling Alignment Eliminator (TCAE-V-3)
Technical Specifications and Details

Max. Static Torque	11,368 Nm	
Nominal Power Cap at (1):	1,000 rpm	45 kW
	1,200 rpm (3)	52 kW
Max. Misalignment Angle	+/- 5°	
Max. Parallel Shaft Offset	+/- 8 mm	
L_{10} bearing life (2)	Contact us for your specific application	
Max. Service Temperature	Up to 100°C	
Connection Details	Keyed shaft via taper lock bush #3020. Shaft size range 25mm - 75mm (1.0" – 3.0")	
Max Swing Diameter	215 mm	
Distance between Shaft Ends	148 (140 – 156) mm	
Axial Expansion	+/- 8 mm	
Weight	13.4 kg (excluding flanges)	

(1) Nominal power capacity shown for different speeds is based on a coupling with a machine service factor of 1.25 operating at 1-degree misaligned angle and operating at 8 hours per day, 25 days per month for 3 years to give a service life of 7,200 hours.
(2) Actual bearing life depends upon a combination of factors. These include equivalent speed, torque and articulated angle. Additionally, shock loads, and environmental conditions may also affect life ratings.
(3) Maximum rated speed.

Notes:

I. The Coupling can be laser aligned when initially installed but as it can handle axial, or parallel, or angular, or combination of any of these in misalignment, it does not need aligning after installation.
II. The coupling does not need maintenance or lubrication once installed.

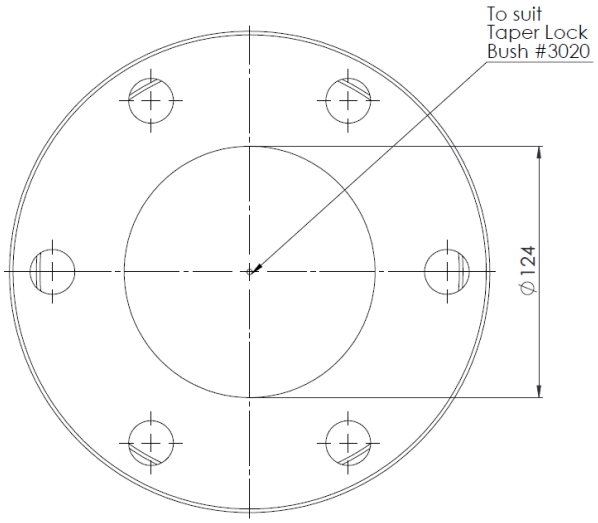

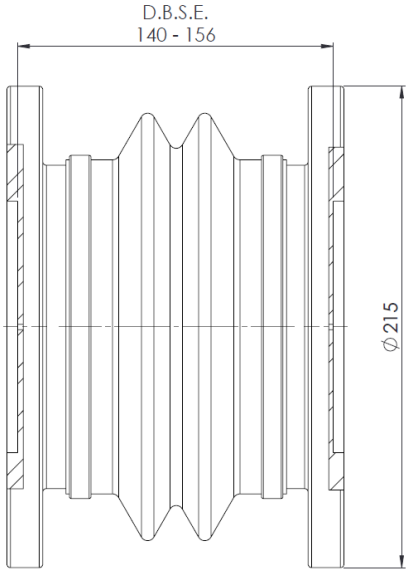

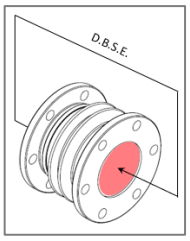

Dimensions and specifications subject to change without notice – Rev.2. Amended 7 Sep 2021

Thompson Coupling Alignment Eliminator (TCAE-V-4)
Technical Specifications and Details

Max. Static Torque	15,680 Nm	
Nominal Power Cap at (1):	1,000 rpm (3)	68 kW
Max. Misalignment Angle	+/- 5°	
Max. Parallel Shaft Offset	+/- 9 mm	
L_{10} bearing life (2)	Contact us for your specific application	
Max. Service Temperature	Up to 100°C	
Connection Details	Keyed shaft via taper lock bush #3525. Shaft size range 35mm – 100mm (1.5” – 4.0”)	
Max Swing Diameter	236 mm	
Distance between Shaft Ends	170 (162 – 178) mm	
Axial Expansion	+/- 8 mm	
Weight	24.5 kg (excluding flanges)	

(1) Nominal power capacity shown for different speeds is based on a coupling with a machine service factor of 1.25 operating at 1-degree misaligned angle and operating at 8 hours per day, 25 days per month for 3 years to give a service life of 7,200 hours.
(2) Actual bearing life depends upon a combination of factors. These include equivalent speed, torque and articulated angle. Additionally, shock loads, and environmental conditions may also affect life ratings.
(3) Maximum rated speed.

Notes:

I. The Coupling can be laser aligned when initially installed but as it can handle axial, or parallel, or angular, or combination of any of these in misalignment, it does not need aligning after installation.
II. The coupling does not need maintenance or lubrication once installed.

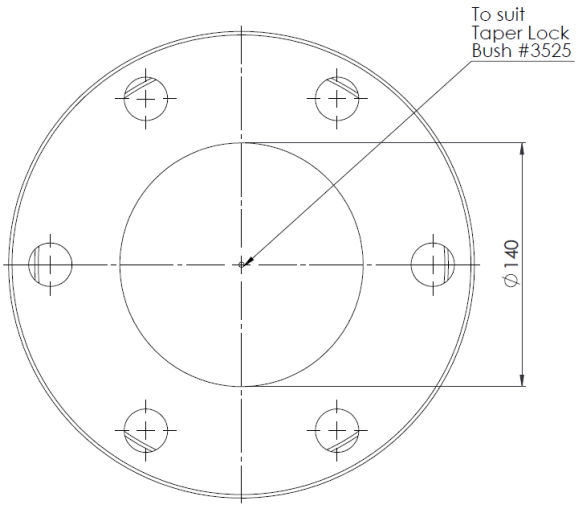

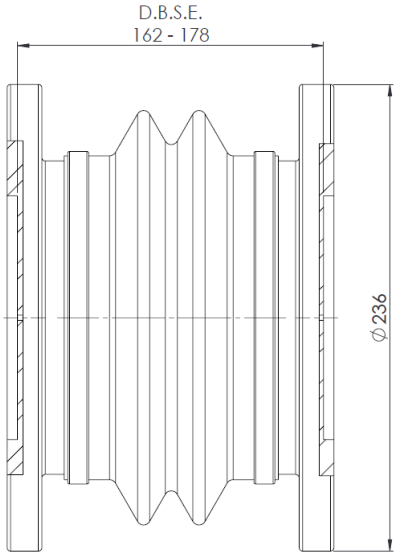

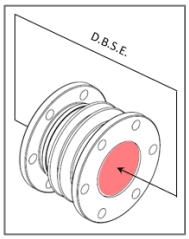

Dimensions and specifications subject to change without notice – Rev.2. Amended 7 Sep 2021

Thompson Coupling Alignment Eliminator (TCAE-V-5)
Technical Specifications and Details

Max. Static Torque	23,912 Nm	
Nominal Power Cap at (1):	1,000 rpm (3)	116 kW
Max. Misalignment Angle	+/- 5°	
Max. Parallel Shaft Offset	+/- 11 mm	
L_{10} bearing life (2)	Contact us for your specific application	
Max. Service Temperature	Up to 100°C	
Connection Details	Keyed shaft via taper lock bush #3525. Shaft size range 35mm - 100mm (1.0” – 4.0”)	
Max Swing Diameter	270 mm	
Distance between Shaft Ends	204 (196 – 212) mm	
Axial Expansion	+/- 8 mm	
Weight	36.2 kg (excluding flanges)	

(1) Nominal power capacity shown for different speeds is based on a coupling with a machine service factor of 1.25 operating at 1-degree misaligned angle and operating at 8 hours per day, 25 days per month for 3 years to give a service life of 7,200 hours.
(2) Actual bearing life depends upon a combination of factors. These include equivalent speed, torque and articulated angle. Additionally, shock loads, and environmental conditions may also affect life ratings.
(3) Maximum rated speed.

Notes:

I. The Coupling can be laser aligned when initially installed but as it can handle axial, or parallel, or angular, or combination of any of these in misalignment, it does not need aligning after installation.
II. The coupling does not need maintenance or lubrication once installed.

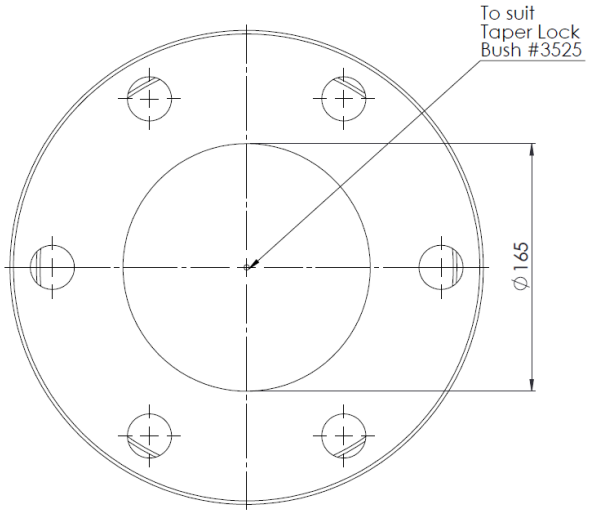

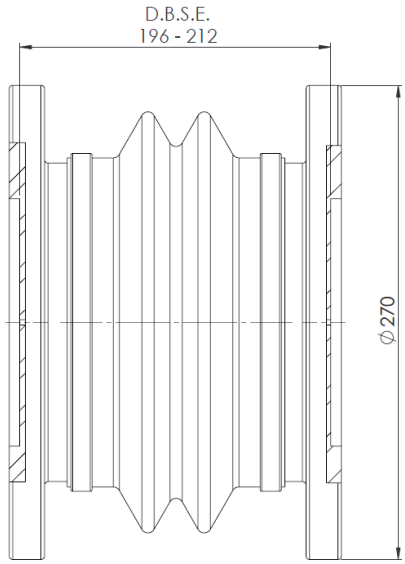

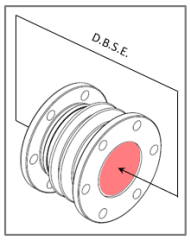

Dimensions and specifications subject to change without notice – Rev.2. Amended 7 Sep 2021

Thompson Coupling Alignment Eliminator (TCAE-V-6)
Technical Specifications and Details

Max. Static Torque	40,000 Nm	
Nominal Power Cap at (1):	1,000 rpm	201 kW
	1,500 rpm	278 kW
	2,200 rpm (3)	379 kW
Max. Misalignment Angle	+/- 5°	
Max. Parallel Shaft Offset	+/- 21 mm	
L_{10} bearing life (2)	Contact us for your specific application	
Max. Service Temperature	Up to 100°C	
Connection Details	Pilot-bored flanges	
Max Swing Diameter	225 mm	
Distance between Shaft Ends	272 (249 – 295) mm	
Axial Expansion	+/- 23 mm	
Weight	30 kg (excluding flanges)	

(1) Nominal power capacity shown for different speeds is based on a coupling with a machine service factor of 1.25 operating at 1-degree misaligned angle and operating at 8 hours per day, 25 days per month for 3 years to give a service life of 7,200 hours.
(2) Actual bearing life depends upon a combination of factors. These include equivalent speed, torque and articulated angle. Additionally, shock loads, and environmental conditions may also affect life ratings.
(3) Maximum rated speed.

Notes:

I. The Coupling can be laser aligned when initially installed but as it can handle axial, or parallel, or angular, or combination of any of these in misalignment, it does not need aligning after installation.
II. The coupling does not need maintenance or lubrication once installed.

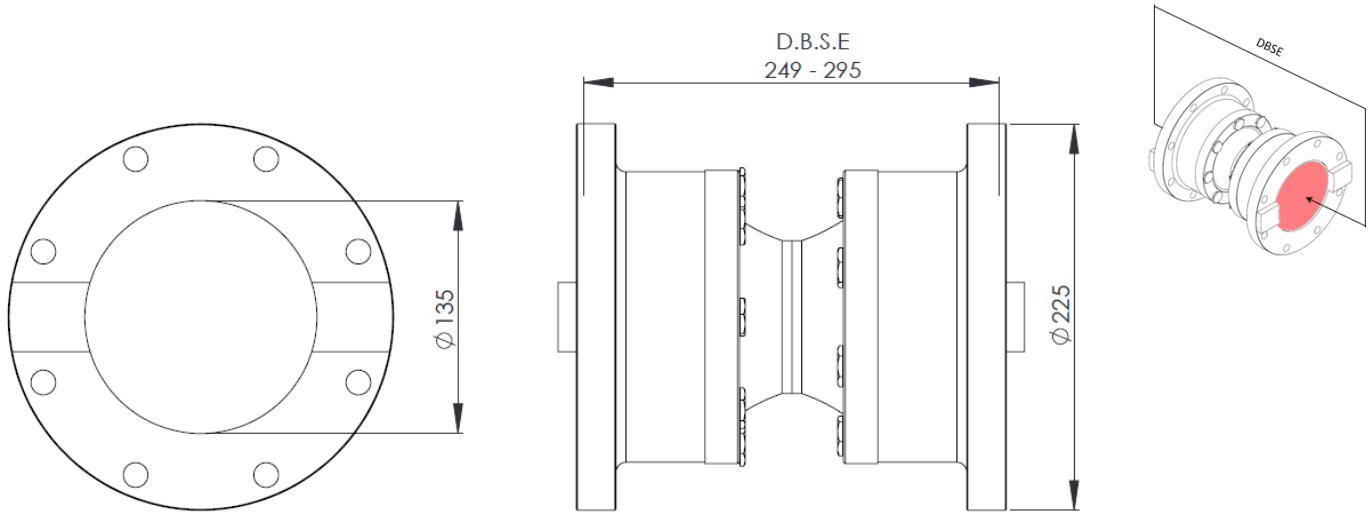

Dimensions and specifications subject to change without notice – Rev.2. Amended 7 Sep 2021

Thompson Coupling Alignment Eliminator (TCAE-V-7)
Technical Specifications and Details

Max. Static Torque	53,200 Nm	
Nominal Power Cap at (1):	1,000 rpm	268 kW
	1,500 rpm	372 kW
	2,000 rpm (3)	469 kW
Max. Misalignment Angle	+/- 5°	
Max. Parallel Shaft Offset	+/- 25 mm	
L_{10} bearing life (2)	Contact us for your specific application	
Max. Service Temperature	Up to 100°C	
Connection Details	Pilot-bored flanges	
Max Swing Diameter	250 mm	
Distance between Shaft Ends	310 (279 – 341) mm	
Axial Expansion	+/- 31 mm	
Weight	39 kg (excluding flanges)	

(1) Nominal power capacity shown for different speeds is based on a coupling with a machine service factor of 1.25 operating at 1-degree misaligned angle and operating at 8 hours per day, 25 days per month for 3 years to give a service life of 7,200 hours.
(2) Actual bearing life depends upon a combination of factors. These include equivalent speed, torque and articulated angle. Additionally, shock loads, and environmental conditions may also affect life ratings.
(3) Maximum rated speed.

Notes:

I. The Coupling can be laser aligned when initially installed but as it can handle axial, or parallel, or angular, or combination of any of these in misalignment, it does not need aligning after installation.
II. The coupling does not need maintenance or lubrication once installed.

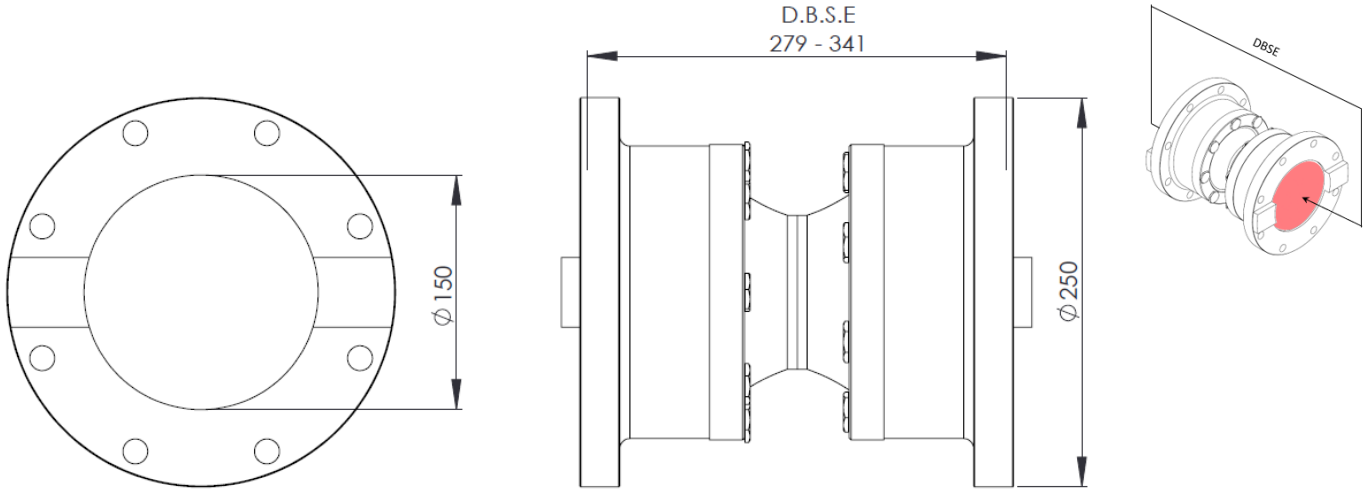

Dimensions and specifications subject to change without notice – Rev.2. Amended 7 Sep 2021

Thompson Coupling Alignment Eliminator (TCAE-V-8)
Technical Specifications and Details

Max. Static Torque	110,600 Nm	
Nominal Power Cap at (1):	1,000 rpm	549 kW
	1,500 rpm	762 kW
	1,800 rpm (3)	882 kW
Max. Misalignment Angle	+/- 5°	
Max. Parallel Shaft Offset	+/- 25 mm	
L_{10} bearing life (2)	Contact us for your specific application	
Max. Service Temperature	Up to 100°C	
Connection Details	Pilot-bored flanges	
Max Swing Diameter	300 mm	
Distance between Shaft Ends	388 (362 – 414) mm	
Axial Expansion	+/- 26 mm	
Weight	50 kg (excluding flanges)	

(1) Nominal power capacity shown for different speeds is based on a coupling with a machine service factor of 1.25 operating at 1-degree misaligned angle and operating at 8 hours per day, 25 days per month for 3 years to give a service life of 7,200 hours.
(2) Actual bearing life depends upon a combination of factors. These include equivalent speed, torque and articulated angle. Additionally, shock loads, and environmental conditions may also affect life ratings.
(3) Maximum rated speed.

Notes:

I. The coupling can be laser aligned when initially installed but as it can handle axial, or parallel, or angular, or combination of any of these in misalignment, it does not need aligning after installation.
II. The coupling requires low maintenance and lubrication once installed.

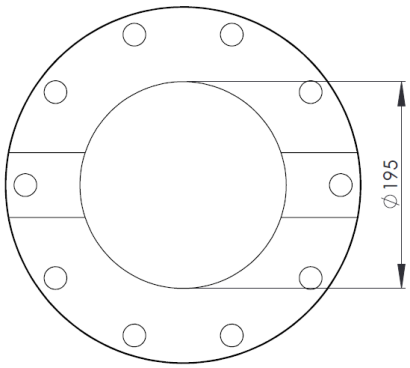

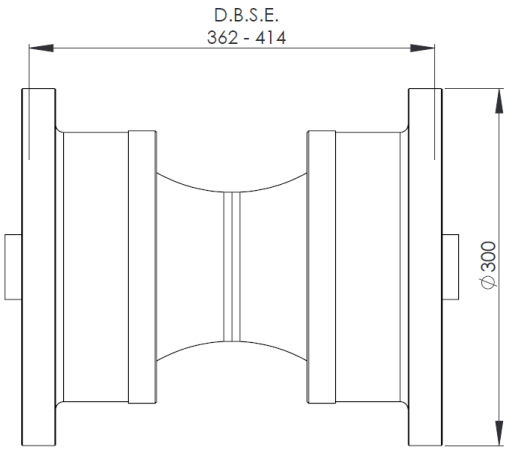

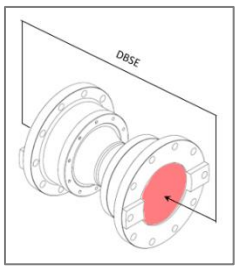

Dimensions and specifications subject to change without notice – Rev.2. Amended 7 Sep 2021

Thompson Coupling Alignment Eliminator (TCAE-V-9)
Technical Specifications and Details

Max. Static Torque	151,900 Nm	
Nominal Power Cap at (1):	1,000 rpm	757 kW
	1,500 rpm	1,050 kW
	1,600 rpm (3)	1,106 kW
Max. Misalignment Angle	+/- 5°	
Max. Parallel Shaft Offset	+/- 35 mm	
L_{10} bearing life (2)	Contact us for your specific application	
Max. Service Temperature	Up to 100°C	
Connection Details	Pilot-bored flanges	
Max Swing Diameter	350 mm	
Distance between Shaft Ends	416 (377 – 455) mm	
Axial Expansion	+/- 39 mm	
Weight	74 kg (excluding flanges)	

(1) Nominal power capacity shown for different speeds is based on a coupling with a machine service factor of 1.25 operating at 1-degree misaligned angle and operating at 8 hours per day, 25 days per month for 3 years to give a service life of 7,200 hours.
(2) Actual bearing life depends upon a combination of factors. These include equivalent speed, torque and articulated angle. Additionally, shock loads, and environmental conditions may also affect life ratings.
(3) Maximum rated speed.

Notes:

I. The coupling can be laser aligned when initially installed but as it can handle axial, or parallel, or angular, or combination of any of these in misalignment, it does not need aligning after installation.
II. The coupling requires low maintenance and lubrication once installed.

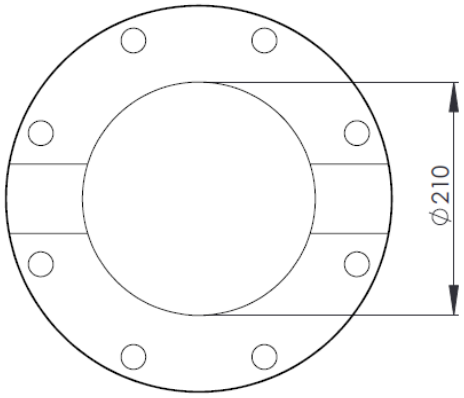

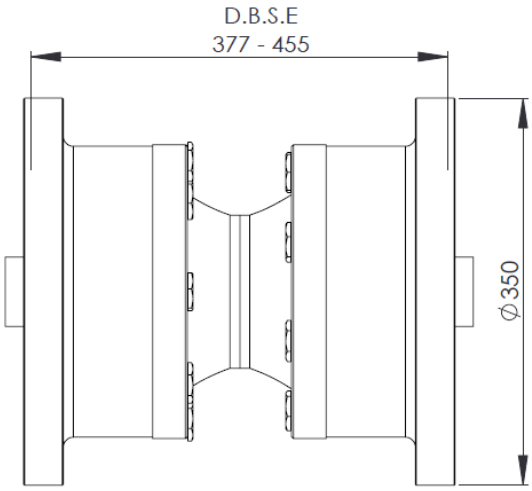

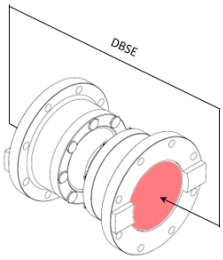

Dimensions and specifications subject to change without notice – Rev.2. Amended 7 Sep 2021

Thompson Coupling Alignment Eliminator (TCAE-V-10)
Technical Specifications and Details

Max. Static Torque	210,000 Nm	
Nominal Power Cap at (1):	1,000 rpm	1,042 kW
	1,300 rpm (3)	1,288 kW
Max. Misalignment Angle	+/- 5°	
Max. Parallel Shaft Offset	+/- 39 mm	
L_{10} bearing life (2)	Contact us for your specific application	
Max. Service Temperature	Up to 100°C	
Connection Details	Pilot-bored flanges	
Max Swing Diameter	390 mm	
Distance between Shaft Ends	466 (423 – 509) mm	
Axial Expansion	+/- 43 mm	
Weight	103 kg (excluding flanges)	

(1) Nominal power capacity shown for different speeds is based on a coupling with a machine service factor of 1.25 operating at 1-degree misaligned angle and operating at 8 hours per day, 25 days per month for 3 years to give a service life of 7,200 hours.
(2) Actual bearing life depends upon a combination of factors. These include equivalent speed, torque and articulated angle. Additionally, shock loads, and environmental conditions may also affect life ratings.
(3) Maximum rated speed.

Notes:

I. The coupling can be laser aligned when initially installed but as it can handle axial, or parallel, or angular, or combination of any of these in misalignment, it does not need aligning after installation.
II. The coupling requires low maintenance and lubrication once installed.

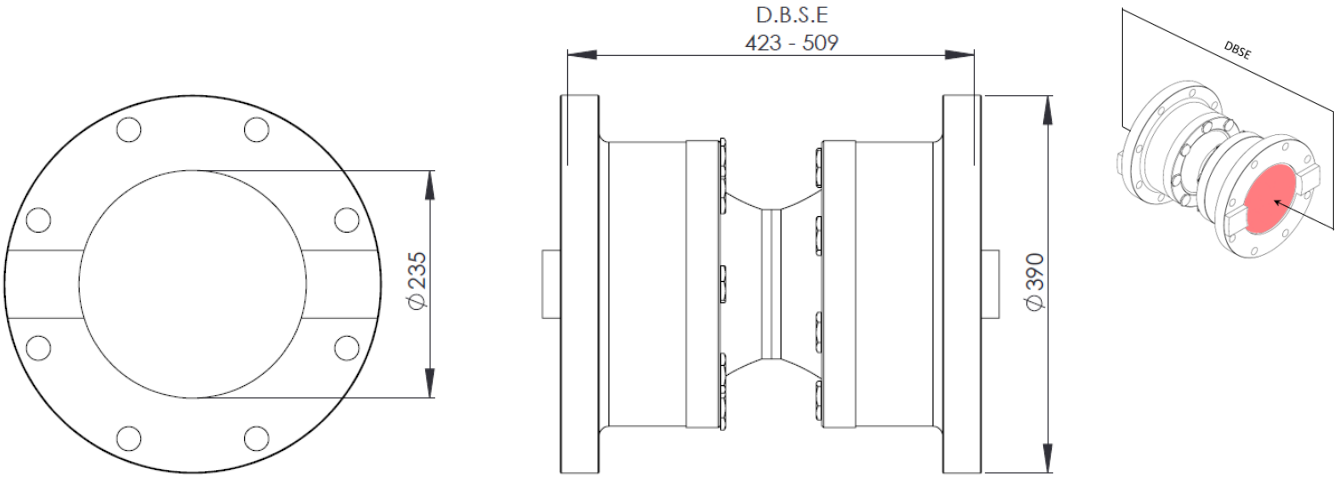

Dimensions and specifications subject to change without notice – Rev.2. Amended 7 Sep 2021

Thompson Coupling Alignment Eliminator (TCAE-V-11)
Technical Specifications and Details

Max. Static Torque	350,000 Nm	
Nominal Power Cap at (1):	1,000 rpm	1,264 kW
	1,200 rpm (3)	1,464 kW
Max. Misalignment Angle	+/- 5°	
Max. Parallel Shaft Offset	+/- 42 mm	
L_{10} bearing life (2)	Contact us for your specific application	
Max. Service Temperature	Up to 100°C	
Connection Details	Pilot-bored flanges	
Max Swing Diameter	440 mm	
Distance between Shaft Ends	502 (455 – 549) mm	
Axial Expansion	+/- 47 mm	
Weight	137 kg (excluding flanges)	

(1) Nominal power capacity shown for different speeds is based on a coupling with a machine service factor of 1.25 operating at 1-degree misaligned angle and operating at 8 hours per day, 25 days per month for 3 years to give a service life of 7,200 hours.
(2) Actual bearing life depends upon a combination of factors. These include equivalent speed, torque and articulated angle. Additionally, shock loads, and environmental conditions may also affect life ratings.
(3) Maximum rated speed.

Notes:

I. The coupling can be laser aligned when initially installed but as it can handle axial, or parallel, or angular, or combination of any of these in misalignment, it does not need aligning after installation.
II. The coupling requires low maintenance and lubrication once installed.

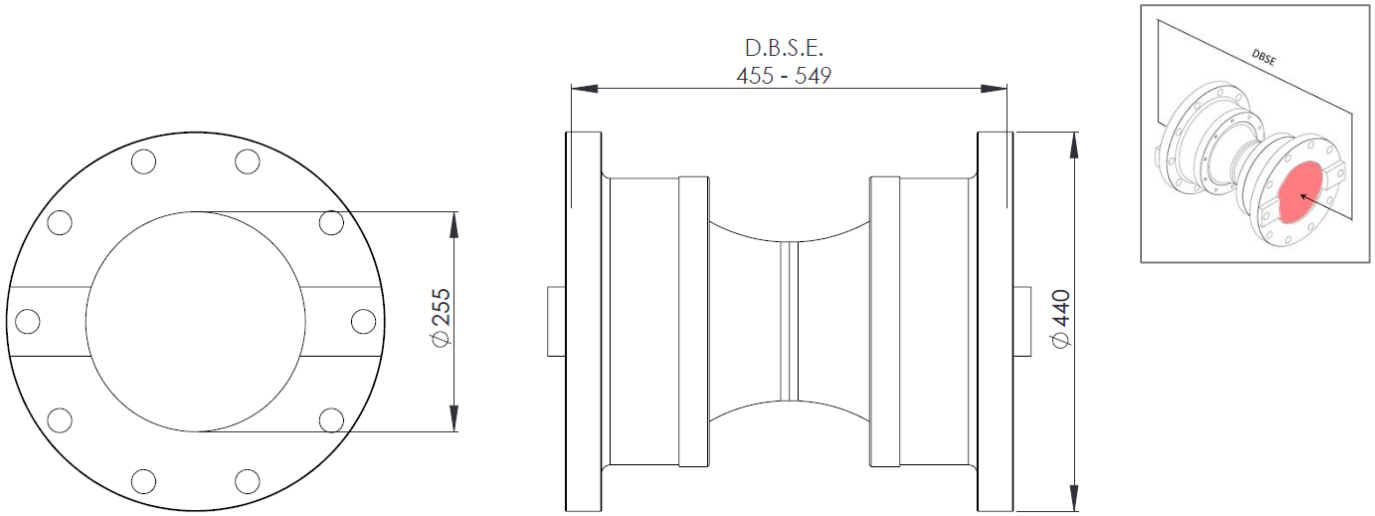

Dimensions and specifications subject to change without notice – Rev.2. Amended 7 Sep 2021

Thompson Coupling Alignment Eliminator (TCAE-V-12)
Technical Specifications and Details

Max. Static Torque	437,500 Nm	
Nominal Power Cap at (1):	1,000 rpm	2,168 kW
	1,100 rpm (3)	2,342 kW
Max. Misalignment Angle	+/- 5°	
Max. Parallel Shaft Offset	+/- 45 mm	
L_{10} bearing life (2)	Contact us for your specific application	
Max. Service Temperature	Up to 100°C	
Connection Details	Pilot-bored flanges	
Max Swing Diameter	490 mm	
Distance between Shaft Ends	528 (476 – 580) mm	
Axial Expansion	+/- 52 mm	
Weight	181 kg (excluding flanges)	

(1) Nominal power capacity shown for different speeds is based on a coupling with a machine service factor of 1.25 operating at 1-degree misaligned angle and operating at 8 hours per day, 25 days per month for 3 years to give a service life of 7,200 hours.
(2) Actual bearing life depends upon a combination of factors. These include equivalent speed, torque and articulated angle. Additionally, shock loads, and environmental conditions may also affect life ratings.
(3) Maximum rated speed.

Notes:

I. The coupling can be laser aligned when initially installed but as it can handle axial, or parallel, or angular, or combination of any of these in misalignment, it does not need aligning after installation.
II. The coupling requires low maintenance and lubrication once installed.

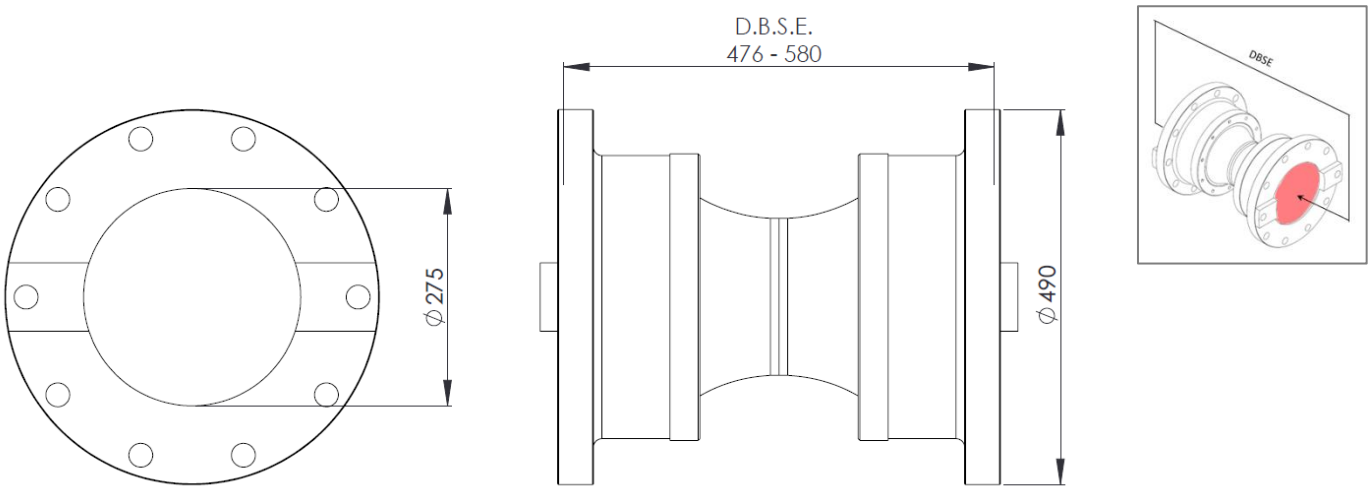

Dimensions and specifications subject to change without notice – Rev.2. Amended 7 Sep 2021

Thompson Coupling Alignment Eliminator (TCAE-V-13)
Technical Specifications and Details

Max. Static Torque	721,000 Nm	
Nominal Power Cap at (1):	1,000 rpm (3)	3,597 kW
Max. Misalignment Angle	+/- 5°	
Max. Parallel Shaft Offset	+/- 48 mm	
L_{10} bearing life (2)	Contact us for your specific application	
Max. Service Temperature	Up to 100°C	
Connection Details	Pilot-bored flanges	
Max Swing Diameter	550 mm	
Distance between Shaft Ends	558 (506 – 610) mm	
Axial Expansion	+/- 52 mm	
Weight	226 kg (excluding flanges)	

(1) Nominal power capacity shown for different speeds is based on a coupling with a machine service factor of 1.25 operating at 1-degree misaligned angle and operating at 8 hours per day, 25 days per month for 3 years to give a service life of 7,200 hours.
(2) Actual bearing life depends upon a combination of factors. These include equivalent speed, torque and articulated angle. Additionally, shock loads, and environmental conditions may also affect life ratings.
(3) Maximum rated speed.

Notes:

I. The coupling can be laser aligned when initially installed but as it can handle axial, or parallel, or angular, or combination of any of these in misalignment, it does not need aligning after installation.
II. The coupling requires low maintenance and lubrication once installed.

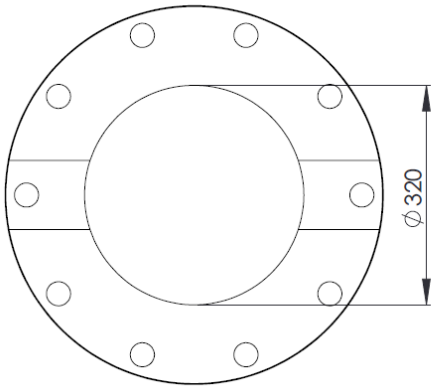

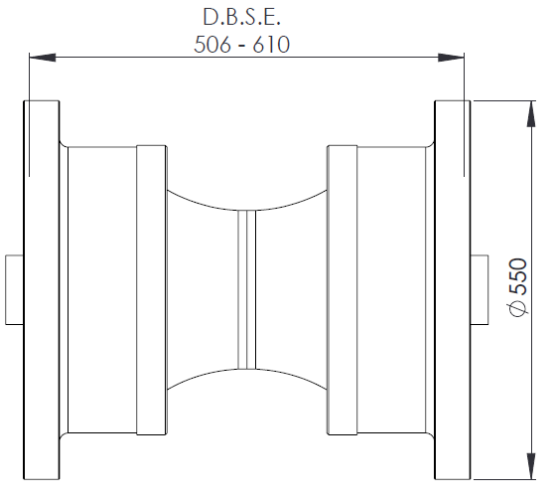

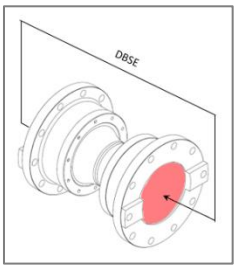

Dimensions and specifications subject to change without notice – Rev.2. Amended 7 Sep 2021

Thompson Coupling Alignment Eliminator (TCAE-V-14)
Technical Specifications and Details

Max. Static Torque	1,015,000 Nm	
Nominal Power Cap at (1):	800 rpm (3)	4,651 kW
Max. Misalignment Angle	+/- 5°	
Max. Parallel Shaft Offset	+/- 52 mm	
L_{10} bearing life (2)	Contact us for your specific application	
Max. Service Temperature	Up to 100°C	
Connection Details	Pilot-bored flanges	
Max Swing Diameter	625 mm	
Distance between Shaft Ends	608 (551 – 665) mm	
Axial Expansion	+/- 57 mm	
Weight	274 kg (excluding flanges)	

(1) Nominal power capacity shown for different speeds is based on a coupling with a machine service factor of 1.25 operating at 1-degree misaligned angle and operating at 8 hours per day, 25 days per month for 3 years to give a service life of 7,200 hours.
(2) Actual bearing life depends upon a combination of factors. These include equivalent speed, torque and articulated angle. Additionally, shock loads, and environmental conditions may also affect life ratings.
(3) Maximum rated speed.

Notes:

I. The coupling can be laser aligned when initially installed but as it can handle axial, or parallel, or angular, or combination of any of these in misalignment, it does not need aligning after installation.
II. The coupling requires low maintenance and lubrication once installed.

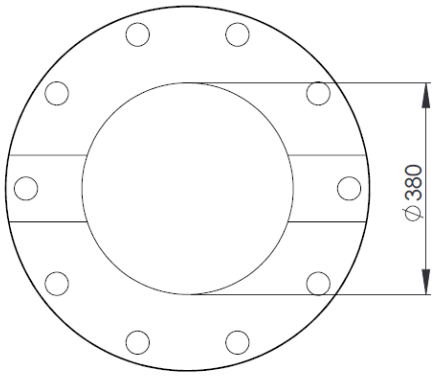

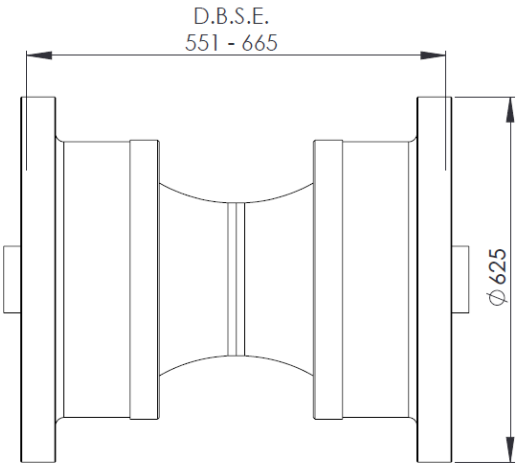

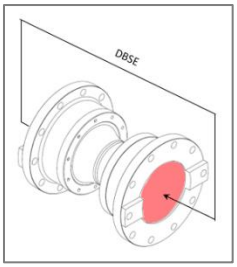

Dimensions and specifications subject to change without notice – Rev.2. Amended 7 Sep 2021

TCAE-R SERIES : SPECIFICATIONS

PARAMETERS		UNIT	TCAE-R-1	TCAE-R-2
MAXIMUM STATIC TORQUE		N.m	2,500	5,780
NOMINAL POWER CAP AT: (Based on machine service factor of 1.25, misaligned angle of 1 degree and service life of 7,200 hours)	1000 RPM	kW	12	30
	1500 RPM	kW	17	42
	3000 RPM	kW	30	74
TOTAL MAXIMUM MISALIGNMENT ANGLE		Degree °	10	10
MAXIMUM PARALLEL SHAFT OFFSET		mm	8	9
MAXIMUM SERVICE TEMPERATURE		°C	120	120
SERVICE LIFE			As per customer application	
DIMENSION ØA		mm	148	178
DIMENSION B NOMINAL D.B.S.E. (RANGE)		mm	135 (130 to 140)	165 (155 to 175)
DIMENSION C		mm	48	48
BORE SIZES		mm	16 to 65	16 to 65
		inch	0.625 to 2.5	0.625 to 2.5

- Taper Lock Bush sold separately
- Quick Release Flange sold separately

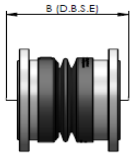

COUPLING ONLY

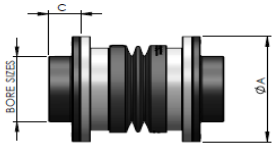

COUPLING WITH QUICK RELEASE FLANGES AND BUSHES

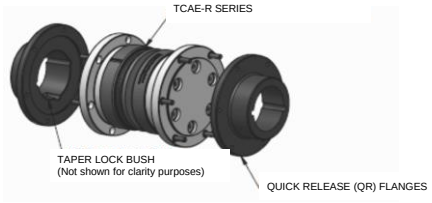

PARAMETERS		UNIT	TCAE-R-3	TCAE-R-4	TCAE-R-5
MAXIMUM STATIC TORQUE		N.m	11,564	15,680	23,912
NOMINAL POWER CAP AT: (Based on machine service factor of 1.25, misaligned angle of 1 degree and service life of 7,200 hours)	1000 RPM	kW	49	77	124
	1500 RPM	kW	68	106	172
	3000 RPM	kW	118	184	302
TOTAL MAXIMUM MISALIGNMENT ANGLE		Degree °	10	10	10
MAXIMUM PARALLEL SHAFT OFFSET		mm	18	17	18
MAXIMUM SERVICE TEMPERATURE		°C	120	120	120
SERVICE LIFE			As per customer application		
DIMENSION ØA		mm	215	253	278
DIMENSION B NOMINAL D.B.S.E. (RANGE)		mm	295 (285 to 305)	295 (285 to 305)	315 (300 to 330)
DIMENSION C		mm	61	74	74
BORE SIZES		mm	25 to 75	35 to 100	35 to 100
		inch	1.00 to 3.00	1.50 to 4.00	1.50 to 4.00

- Taper Lock Bush sold separately
- Quick Release Flange sold separately

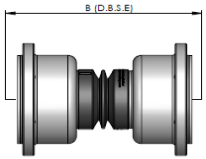

COUPLING ONLY

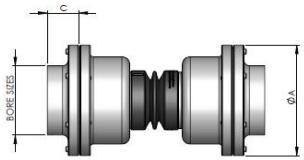

COUPLING WITH QUICK RELEASE FLANGES AND BUSHES

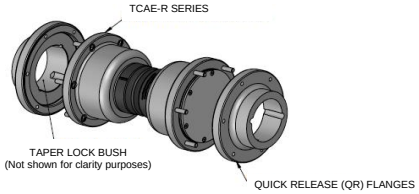

PARAMETERS		UNIT	TCAE-R-6	TCAE-R-7	TCAE-R-8
MAXIMUM STATIC TORQUE		N.m	29,694	42,238	63,112
NOMINAL POWER CAP AT: (Based on machine service factor of 1.25, misaligned angle of 1 degree and service life of 7,200 hours)	1000 RPM	kW	166	240	316
	1500 RPM	kW	230	334	442
	3000 RPM	kW	n/a *	n/a *	n/a *
TOTAL MAXIMUM MISALIGNMENT ANGLE		Degree °	10	10	10
MAXIMUM PARALLEL SHAFT OFFSET		mm	19	18	20
MAXIMUM SERVICE TEMPERATURE		°C	120	120	120
SERVICE LIFE			As per customer application		
DIMENSION ØA		mm	300	330	370
DIMENSION B NOMINAL D.B.S.E. (RANGE)		mm	291 (277 to 305)	344 (330 to 358)	344 (330 to 358)
DIMENSION C		mm	74	74	74
BORE SIZES		mm	35 to 100	35 to 100	35 to 100
		inch	1.50 to 4.00	1.50 to 4.00	1.50 to 4.00

- Taper Lock Bush sold separately
- Quick Release Flange sold separately

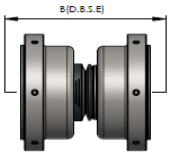

COUPLING ONLY

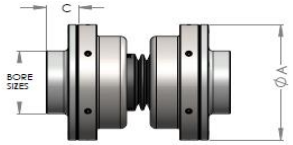

COUPLING WITH QUICK RELEASE FLANGES AND BUSHES

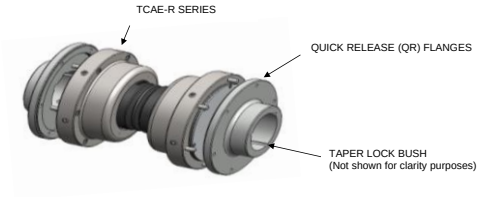

* Power Cap. at maximum rated speed available in detailed technical specifications.

Thompson Coupling Alignment Eliminator (TCAE-R-1)
Technical Specifications and Details

Max. Static Torque	2,500 Nm	
Nominal Power Cap at (1):	1,000 rpm	12 kW
	1,500 rpm	17 kW
	3,000 rpm	13 kW
Max. Misalignment Angle	+/- 5°	
Max. Parallel Shaft Offset	+/- 8 mm	
L_{10} bearing life (2)	Contact us for your specific application	
Max. Service Temperature	Up to 120 °C continuous	
Connection Details	Keyed shaft via taper lock bush #2517. Shaft size range 16mm - 65mm (0.625" - 2.5")	
Max Swing Diameter	148 mm	
Distance between Shaft Ends	130 - 140 mm (see drawing)	
Weight	1.9 kg (excluding QR flange weights)	
Rotational moment of Inertia	0.022 kgm²	

(1) Nominal power capacity shown for different speeds is based on a coupling with a machine service factor of 1.25 operating at 1-degree misaligned angle and operating at 8 hours per day, 25 days per month for 3 years to give a service life of 7,200 hours.
(2) Actual bearing life depends upon a combination of factors. These include equivalent speed, torque and articulated angle. Additionally, shock loads, and environmental conditions may also affect life ratings.

Notes:

I. The Coupling can be laser aligned when initially installed but as it can handle axial, or parallel, or angular, or combination of any of these in misalignment, it does not need aligning after installation.
II. The coupling does not need maintenance or lubrication once installed.

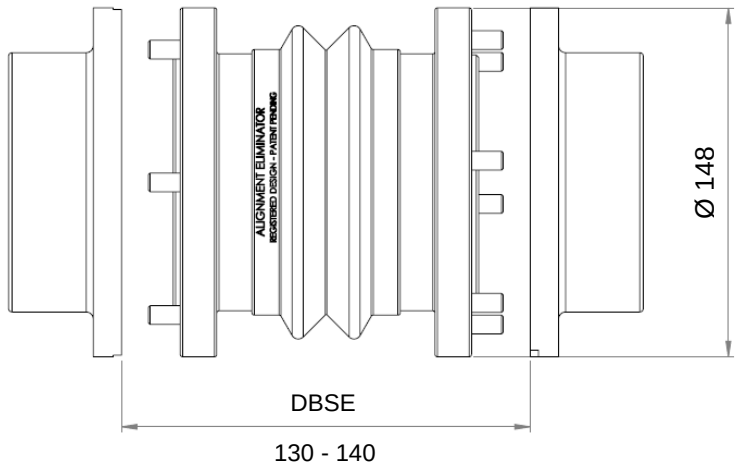

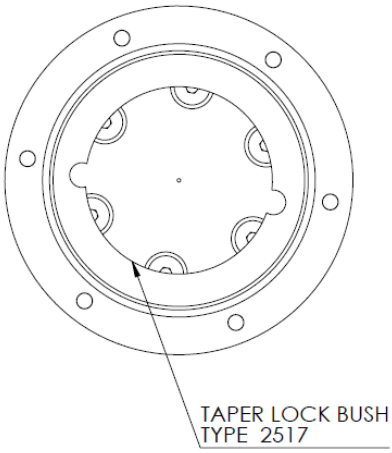

Dimensions and specifications subject to change without notice – Rev.3. Amended 7 Sep 2021

Thompson Coupling Alignment Eliminator (TCAE-R-2)
Technical Specifications and Details

Max. Static Torque	5,780 Nm	
Nominal Power Cap at (1):	1,000 rpm	30 kW
	1,500 rpm	42 kW
	3,000 rpm	74 kW
Max. Misalignment Angle	+/- 5°	
Max. Parallel Shaft Offset	+/- 5 mm	
L_{10} bearing life (2)	Contact us for your specific application	
Max. Service Temperature	Up to 120 °C continuous	
Connection details	Keyed shaft via taper lock bush #2517. Shaft size range 16mm - 65mm (0.625” - 2.50”)	
Max Swing Diameter	178 mm	
Distance between Shaft Ends	155 - 175 mm (see drawing)	
Weight	9.9 kg (excluding QR flange weights)	
Rotational Moment of Inertia	0.085 kgm²	

(1) Nominal power capacity shown for different speeds is based on a coupling with a machine service factor of 1.25 operating at 1-degree misaligned angle and operating at 8 hours per day, 25 days per month for 3 years to give a service life of 7,200 hours.
(2) Actual bearing life depends upon a combination of factors. These include equivalent speed, torque and articulated angle. Additionally, shock loads, and environmental conditions may also affect life ratings.

Notes:

I. The Coupling can be laser aligned when initially installed but as it can handle axial, or parallel, or angular, or combination of any of these in misalignment, it does not need aligning after installation.
II. The coupling does not need maintenance or lubrication once installed.

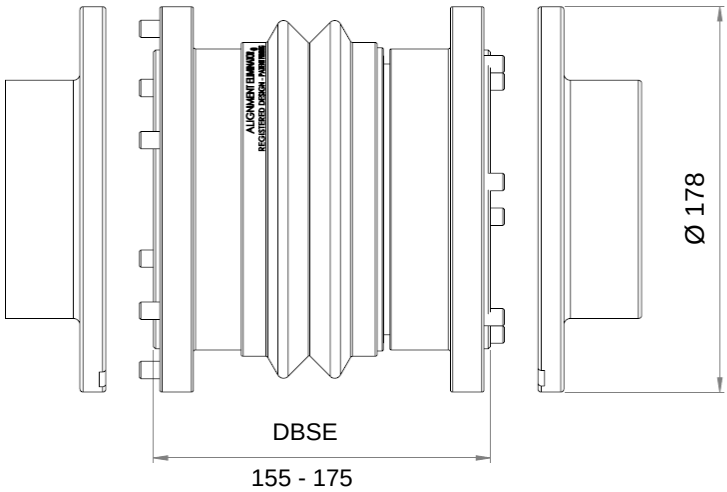

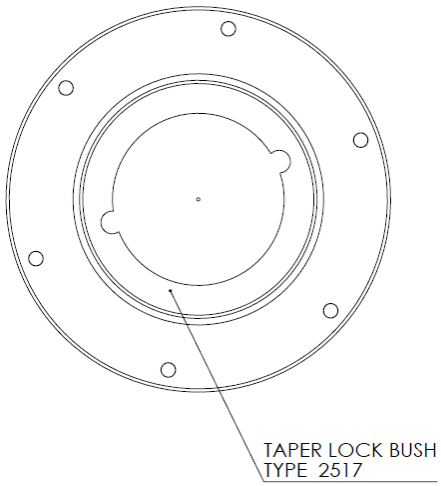

Dimensions and specifications subject to change without notice – Rev.3. Amended 7 Sep 2021

Thompson Coupling Alignment Eliminator (TCAE-R-3)
Technical Specifications and Details

Max. Static Torque	11,564 Nm	
Nominal Power Cap at (1):	1,000 rpm	49 kW
	1,500 rpm	68 kW
	3,000 rpm	118 kW
Max. Misalignment Angle	+/- 5°	
Max. Parallel Shaft Offset	+/- 18 mm	
L_{10} bearing life (2)	Contact us for your specific application	
Max. Service Temperature	Up to 120 °C continuous	
Connection Details	Keyed shaft via taper lock bush #3020. Shaft size range 25mm - 75mm (1.00” – 3.00”)	
Max Swing Diameter	215 mm	
Distance between Shaft Ends	285 – 305 mm (see drawing)	
Weight	20.5 kg (excluding QR flange weights)	
Rotational moment of Inertia	0.13 kgm²	

(1) Nominal power capacity shown for different speeds is based on a coupling with a machine service factor of 1.25 operating at 1-degree misaligned angle and operating at 8 hours per day, 25 days per month for 3 years to give a service life of 7,200 hours.

(2) Actual bearing life depends upon a combination of factors. These include equivalent speed, torque and articulated angle. Additionally, shock loads, and environmental conditions may also affect life ratings.

Notes:

I. The Coupling can be laser aligned when initially installed but as it can handle axial, or parallel, or angular, or combination of any of these in misalignment, it does not need aligning after installation.

II. The coupling does not need maintenance or lubrication once installed.

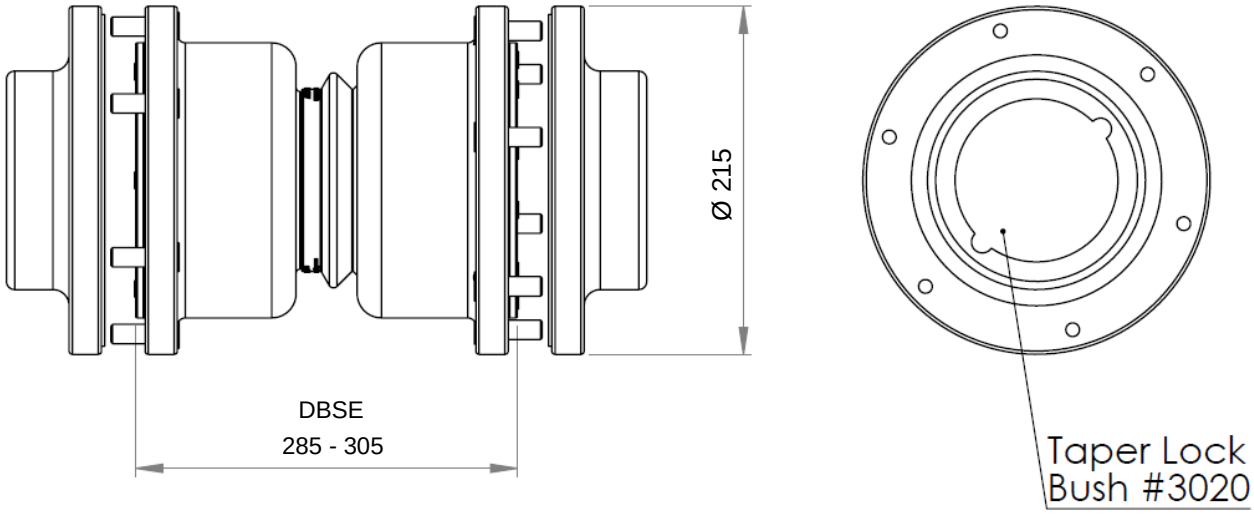

Dimensions and specifications subject to change without notice – Rev.3. Amended 7 Sep 2021

Thompson Coupling Alignment Eliminator (TCAE-R-4)
Technical Specifications and Details

Max. Static Torque	15,680 Nm	
Nominal Power Cap at (1):	1,000 rpm	77 kW
	1,500 rpm	106 kW
	3,000 rpm	184 kW
Max. Misalignment Angle	+/- 5°	
Max. Parallel Shaft Offset	+/- 17mm	
L_{10} bearing life (2)	Contact us for your specific application	
Max. Service Temperature	Up to 120 °C continuous	
Connection Details	Keyed shaft via taper lock bush #3525. Shaft size range 35mm - 100mm (1.50” - 4.00”)	
Max Swing Diameter	253 mm	
Distance between Shaft Ends	285 - 305 mm (see drawing)	
Weight	28.3 kg (excluding QR flange weights)	
Rotational moment of Inertia	0.27 kgm²	

(1) Nominal power capacity shown for different speeds is based on a coupling with a machine service factor of 1.25 operating at 1-degree misaligned angle and operating at 8 hours per day, 25 days per month for 3 years to give a service life of 7,200 hours.
(2) Actual bearing life depends upon a combination of factors. These include equivalent speed, torque and articulated angle. Additionally, shock loads, and environmental conditions may also affect life ratings.

Notes:

I. The Coupling can be laser aligned when initially installed but as it can handle axial, or parallel, or angular, or combination of any of these in misalignment, it does not need aligning after installation.
II. The coupling does not need maintenance or lubrication once installed.

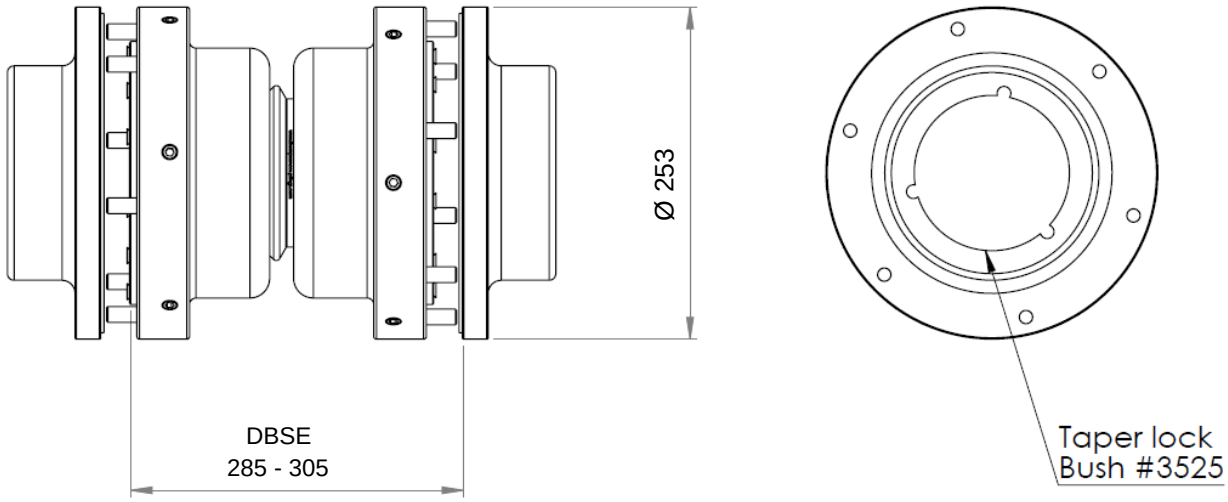

Dimensions and specifications subject to change without notice – Rev.3. Amended 7 Sep 2021

Thompson Coupling Alignment Eliminator (TCAE-R-5)
Technical Specifications and Details

Max. Static Torque	23,912 Nm	
Nominal Power Cap at (1):	1,000 rpm	124 kW
	1,500 rpm	172 kW
	3,000 rpm	302 kW
Max. Misalignment Angle	+/- 5°	
Max. Parallel Shaft Offset	+/- 18 mm	
L_{10} bearing life (2)	Contact us for your specific application	
Max. Service Temperature	Up to 120 °C continuous	
Connection Details	Keyed shaft via taper lock bush #3525. Shaft size range 35mm-100mm (1.50" – 4.00")	
Max Swing Diameter	278 mm	
Distance between Shaft Ends	300 - 330 mm (see drawing)	
Weight	38.6 kg (excluding QR flange weights)	
Rotational moment of Inertia	0.33 kgm²	

(1) Nominal power capacity shown for different speeds is based on a coupling with a machine service factor of 1.25 operating at 1-degree misaligned angle and operating at 8 hours per day, 25 days per month for 3 years to give a service life of 7,200 hours.
(2) Actual bearing life depends upon a combination of factors. These include equivalent speed, torque and articulated angle. Additionally, shock loads, and environmental conditions may also affect life ratings.

Notes:

I. The Coupling can be laser aligned when initially installed but as it can handle axial, or parallel, or angular, or combination of any of these in misalignment, it does not need aligning after installation.
II. The coupling does not need maintenance or lubrication once installed.

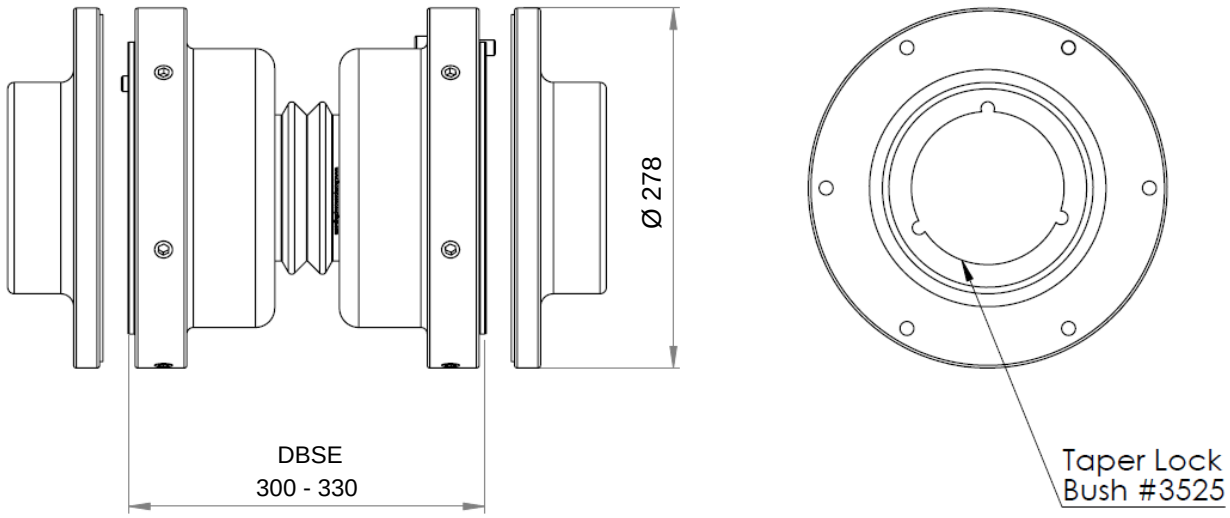

Dimensions and specifications subject to change without notice – Rev.3. Amended 7 Sep 2021

Thompson Coupling Alignment Eliminator (TCAE-R-6)
Technical Specifications and Details

Max. Static Torque	29,694 Nm	
Nominal Power Cap at (1):	1,000 rpm	166 kW
	1,500 rpm	230 kW
	2,700 rpm (3)	369 kW
Max. Misalignment Angle	+/- 5°	
Max. Parallel Shaft Offset	+/- 19 mm	
L_{10} bearing life (2)	Contact us for your specific application	
Max. Service Temperature	Up to 120 °C continuous	
Connection Details	Keyed shaft via taper lock bush #3525. Shaft size range 35mm - 100mm (1.50” - 4.00”)	
Max Swing Diameter	300 mm	
Distance between Shaft Ends	277 - 305 mm (see drawing)	
Weight	43.3 kg (excluding QR flange weights)	
Rotational moment of Inertia	0.64 kgm²	

(1) Nominal power capacity shown for different speeds is based on a coupling with a machine service factor of 1.25 operating at 1-degree misaligned angle and operating at 8 hours per day, 25 days per month for 3 years to give a service life of 7,200 hours.
(2) Actual bearing life depends upon a combination of factors. These include equivalent speed, torque and articulated angle. Additionally, shock loads, and environmental conditions may also affect life ratings.
(3) Maximum rated speed.

Notes:

I. The Coupling can be laser aligned when initially installed but as it can handle axial, or parallel, or angular, or combination of any of these in misalignment, it does not need aligning after installation.
II. The coupling does not need maintenance or lubrication once installed.

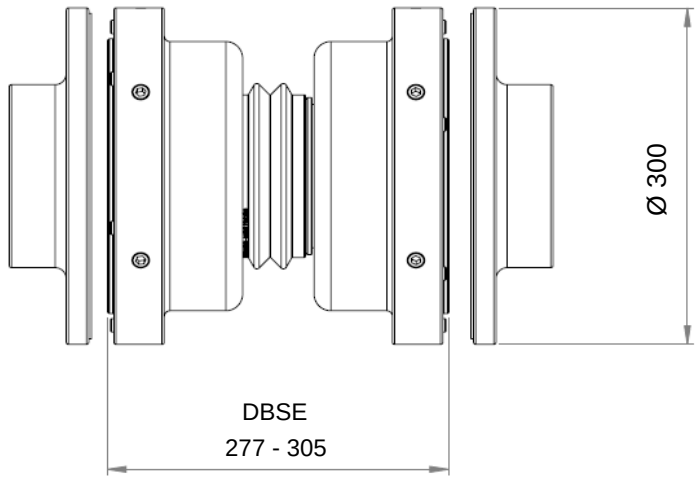

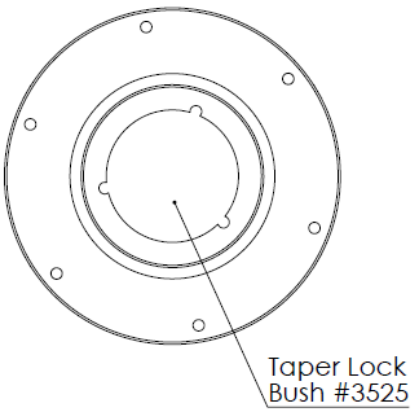

Dimensions and specifications subject to change without notice – Rev.3. Amended 7 Sep 2021

Thompson Coupling Alignment Eliminator (TCAE-R-7)
Technical Specifications and Details

Max. Static Torque	42,238 Nm	
Nominal Power Cap at (1):	1,000 rpm	240 kW
	1,500 rpm	334 kW
	2,300 rpm (3)	474 kW
Max. Misalignment Angle	+/- 5°	
Max. Parallel Shaft Offset	+/- 18 mm	
L_{10} bearing life (2)	Contact us for your specific application	
Max. Service Temperature	Up to 120 °C continuous	
Connection Details	Keyed shaft via taper lock bush #3525. Shaft size range 35mm - 100mm (1.50” - 4.00”)	
Max Swing Diameter	330 mm	
Distance between Shaft Ends	330 - 358 mm (see drawing)	
Weight	59.8 kg (including QR flange weights)	
Rotational moment of Inertia	1.10 kgm²	

(1) Nominal power capacity shown for different speeds is based on a coupling with a machine service factor of 1.25 operating at 1-degree misaligned angle and operating at 8 hours per day, 25 days per month for 3 years to give a service life of 7,200 hours.
(2) Actual bearing life depends upon a combination of factors. These include equivalent speed, torque and articulated angle. Additionally, shock loads, and environmental conditions may also affect life ratings.
(3) Maximum rated speed.

Notes:

I. The Coupling can be laser aligned when initially installed but as it can handle axial, or parallel, or angular, or combination of any of these in misalignment, it does not need aligning after installation.
II. The coupling does not need maintenance or lubrication once installed.

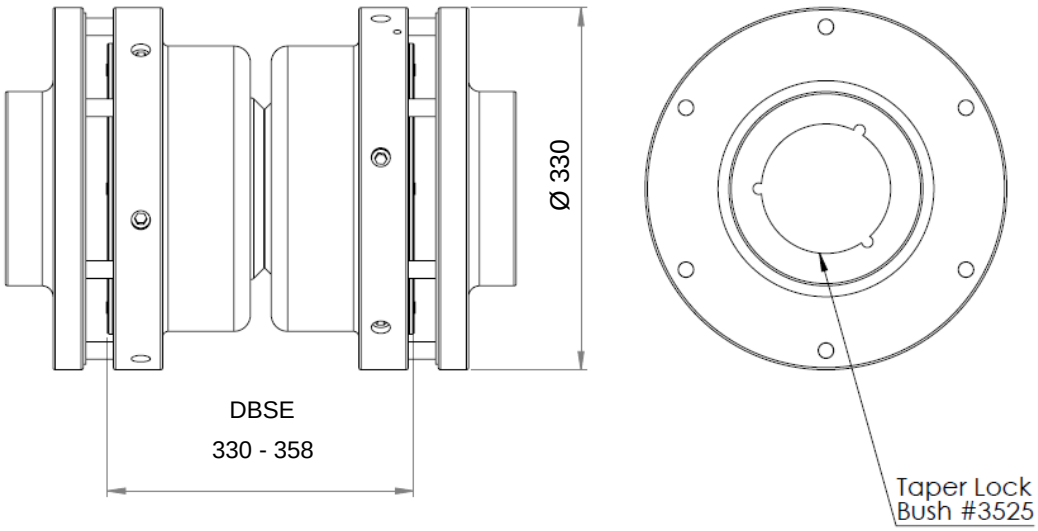

Dimensions and specifications subject to change without notice – Rev.3. Amended 7 Sep 2021

Thompson Coupling Alignment Eliminator (TCAE-R-8)
Technical Specifications and Details

Max. Static Torque	63,112 Nm	
Nominal Power Cap at (1):	1,000 rpm	316 kW
	1,500 rpm	442 kW
	2,000 rpm (3)	560 kW
Max. Misalignment Angle	+/- 5°	
Max. Parallel Shaft Offset	+/- 20mm	
L_{10} bearing life (2)	Contact us for your specific application	
Max. Service Temperature	Up to 120 °C continuous	
Connection Details	Keyed shaft via taper lock bush #3525. Shaft size range 35mm - 100mm (1.50” - 4.00”)	
Max Swing Diameter	370 mm	
Distance between Shaft Ends	330 - 358 mm (see drawing)	
Weight	62.3 kg (excluding QR flange weights)	
Rotational moment of Inertia	1.48 kgm²	

(1) Nominal power capacity shown for different speeds is based on a coupling with a machine service factor of 1.25 operating at 1-degree misaligned angle and operating at 8 hours per day, 25 days per month for 3 years to give a service life of 7,200 hours.
(2) Actual bearing life depends upon a combination of factors. These include equivalent speed, torque and articulated angle. Additionally, shock loads, and environmental conditions may also affect life ratings.
(3) Maximum rated speed.

Notes:

I. The Coupling can be laser aligned when initially installed but as it can handle axial, or parallel, or angular, or combination of any of these in misalignment, it does not need aligning after installation.
II. The coupling does not need maintenance or lubrication once installed.

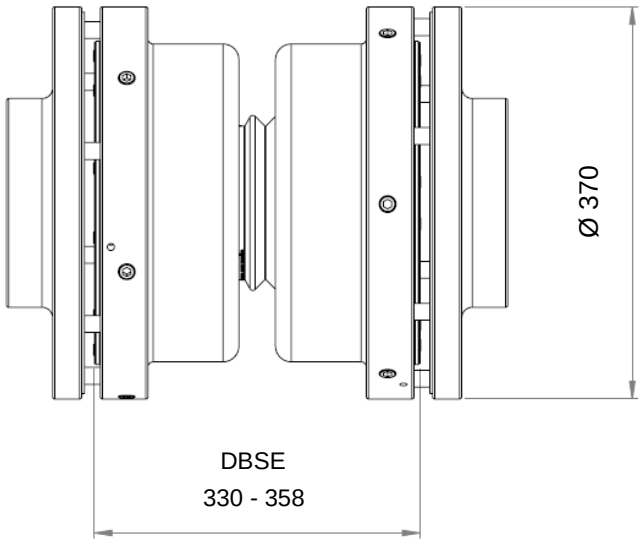

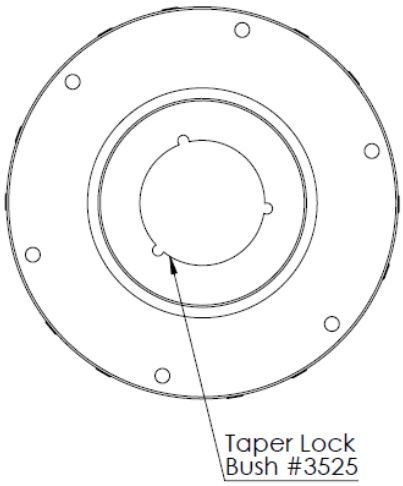

Dimensions and specifications subject to change without notice – Rev.3. Amended 7 Sep 2021

TCAE-L SERIES : SPECIFICATIONS

PARAMETERS		UNIT	TCAE-L-1	TCAE-L-2	TCAE-L-3	TCAE-L-4	TCAE-L-5	TCAE-L-6	TCAE-L-7
MAXIMUM STATIC TORQUE		N.m	2500	5780	11564	15680	23912	29694	42238
NOMINAL POWER CAP AT: (Based on machine service factor of 1.25, misaligned angle of 1 degree and service life of 7,200 hours)	1000 RPM	kW ***	12	30	49	77	124	166	240
	1500 RPM	kW ***	17	42	68	106	172	230	334
	3000 RPM	kW ***	30	74	118	184	302	n/a *	n/a *
MAXIMUM MISALIGNMENT ANGLE		Degree °	10	10	10	10	10	10	10
MAXIMUM PARALLEL SHAFT OFFSET		mm	dependant on customer length						
MAXIMUM SERVICE TEMPERATURE		°C	100	100	100	100	100	100	100
SERVICE LIFE			As per customer application						
DIMENSION ØA		mm	148	178	215	253	278	300	330
DIMENSION L (MINIMUM)		mm	307	386	429	473	500	582	643
AXIAL EXPANSION		+/- mm	16	20	24	27	29	29	30

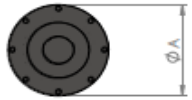

TCAE-L SERIES - FIXED SHAFT
(DBSE to Customer Size)

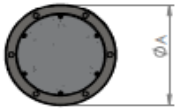

TCAE-L SERIES - SLIDING SHAFT
(DBSE to Customer Size)

PARAMETERS		UNIT	TCAE-L-8	TCAE-L-9	TCAE-L-10	TCAE-L-11	TCAE-L-12	TCAE-L-13	TCAE-L-14
MAXIMUM STATIC TORQUE		N.m	63112	92,022	142,100	187,180	259,700	343,000	618,380
NOMINAL POWER CAP AT: (Based on machine service factor of 1.25, misaligned angle of 1 degree and service life of 7,200 hours)	1000 RPM	kW ***	316	403	591	840	1,161	1,550	1,823 **
	1500 RPM	kW ***	442	559	n/a *	n/a *	n/a *	n/a *	n/a *
	3000 RPM	kW ***	n/a *	n/a *	n/a *	n/a *	n/a *	n/a *	n/a *
MAXIMUM MISALIGNMENT ANGLE		Degree °	10	10	10	10	10	10	8
MAXIMUM PARALLEL SHAFT OFFSET		mm	dependant on customer length						
MAXIMUM SERVICE TEMPERATURE		°C	100	100	100	100	100	100	100
SERVICE LIFE			As per customer application						
DIMENSION ØA		mm	370	336	376	420	462	504	580
DIMENSION L (MINIMUM)		mm	760	535	570	650	715	770	840
AXIAL EXPANSION		+/- mm	35	40	40	44	46	50	50

* Power Cap. at maximum rated speed available in detailed technical specifications.
** Power Cap. at maximum rated speed of 800 rpm.
*** Maximum power cap. subject to shaft length.

Thompson Coupling Alignment Eliminator (TCAE-L-1)
Technical Specifications and Details

Max. Static Torque	2,500 Nm	
Nominal Power Cap at (1),(3) **:**	1,000 rpm	12 kW
	1,500 rpm	17 kW
	3,000 rpm	13 kW
Max. Misalignment Angle	+/- 5°	
Max. Parallel Shaft Offset	+/- 8 mm	
L10 bearing life (2)	Contact us for your specific application	
Max. Service Temperature	Up to 120 °C continuous	
Connection Details	Keyed shaft via taper lock bush #2517. Shaft size range 16mm - 65mm (0.625" - 2.5")	
Max Swing Diameter	148 mm	
Overall Length	307 mm minimum	
Weight	Dependant on customer application by shaft length	
Rotational moment of Inertia	Dependant on customer application by shaft length	

(1) Nominal power capacity shown for different speeds is based on a coupling with a machine service factor of 1.25 operating at 1-degree misaligned angle and operating at 8 hours per day, 25 days per month for 3 years to give a service life of 7,200 hours.
(2) Actual bearing life depends upon a combination of factors. These include equivalent speed, torque and articulated angle. Additionally, shock loads, and environmental conditions may also affect life ratings.
(3) Maximum power cap. subject to shaft length.

Notes:

I. The Coupling can be laser aligned when initially installed but as it can handle axial, or parallel, or angular, or combination of any of these in misalignment, it does not need aligning after installation.
II. The coupling does not need maintenance or lubrication once installed.

TCAE-L Series - Fixed Shaft

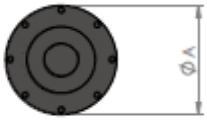

TCAE-L Series - Sliding Shaft

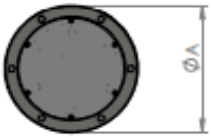

Dimensions and specifications subject to change without notice – Rev.3. Amended 7 Sep 2021

Thompson Coupling Alignment Eliminator (TCAE-L-2)
Technical Specifications and Details

Max. Static Torque	5,780 Nm	
Nominal Power Cap at (1),(3) :	1,000 rpm	30 kW
	1,500 rpm	42 kW
	3,000 rpm	74 kW
Max. Misalignment Angle	+/- 5°	
Max. Parallel Shaft Offset	+/- 5 mm	
L_{10} bearing life (2)	Contact us for your specific application	
Max. Service Temperature	Up to 120 °C continuous	
Connection details	Keyed shaft via taper lock bush #2517. Shaft size range 16mm - 65mm (0.625” - 2.50”)	
Max Swing Diameter	178 mm	
Overall Length	386 mm minimum	
Weight	Dependant on customer application by shaft length	
Rotational Moment of Inertia	Dependant on customer application by shaft length	

(1) Nominal power capacity shown for different speeds is based on a coupling with a machine service factor of 1.25 operating at 1-degree misaligned angle and operating at 8 hours per day, 25 days per month for 3 years to give a service life of 7,200 hours.
(2) Actual bearing life depends upon a combination of factors. These include equivalent speed, torque and articulated angle. Additionally, shock loads, and environmental conditions may also affect life ratings.
(3) Maximum power cap. subject to shaft length.

Notes:

I. The Coupling can be laser aligned when initially installed but as it can handle axial, or parallel, or angular, or combination of any of these in misalignment, it does not need aligning after installation.
II. The coupling does not need maintenance or lubrication once installed.

TCAE-L Series - Fixed Shaft

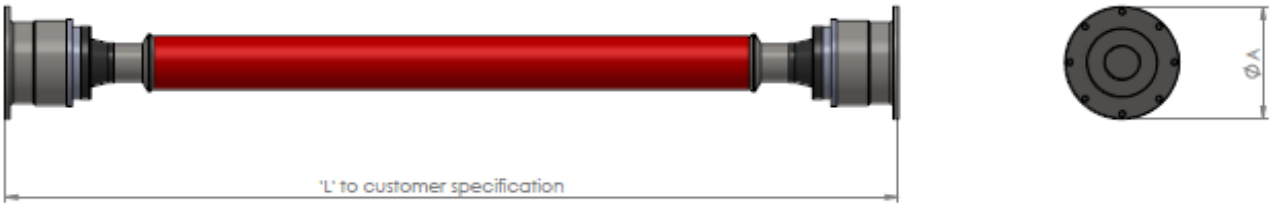

TCAE-L Series - Sliding Shaft

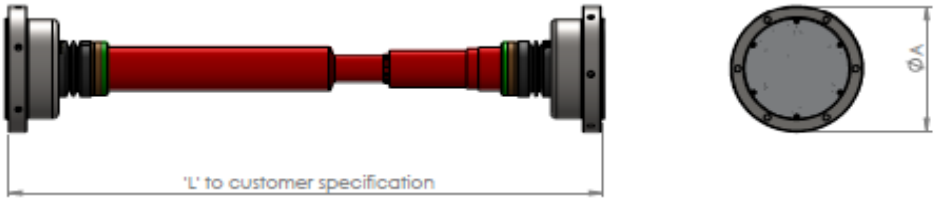

Dimensions and specifications subject to change without notice – Rev.3. Amended 7 Sep 2021

Thompson Coupling Alignment Eliminator (TCAE-L-3)
Technical Specifications and Details

Max. Static Torque	11,564 Nm	
Nominal Power Cap at (1),(3):	1,000 rpm	49 kW
	1,500 rpm	68 kW
	3,000 rpm	118 kW
Max. Misalignment Angle	+/- 5°	
Max. Parallel Shaft Offset	+/- 18 mm	
L10 bearing life (2)	Contact us for your specific application	
Max. Service Temperature	Up to 120 °C continuous	
Connection Details	Keyed shaft via taper lock bush #3020. Shaft size range 25mm - 75mm (1.00” – 3.00”)	
Max Swing Diameter	215 mm	
Overall Length	429 mm minimum	
Weight	Dependant on customer application by shaft length	
Rotational moment of Inertia	Dependant on customer application by shaft length	

(1) Nominal power capacity shown for different speeds is based on a coupling with a machine service factor of 1.25 operating at 1-degree misaligned angle and operating at 8 hours per day, 25 days per month for 3 years to give a service life of 7,200 hours.
(2) Actual bearing life depends upon a combination of factors. These include equivalent speed, torque and articulated angle. Additionally, shock loads, and environmental conditions may also affect life ratings.
(3) Maximum power cap. subject to shaft length.

Notes:

I. The Coupling can be laser aligned when initially installed but as it can handle axial, or parallel, or angular, or combination of any of these in misalignment, it does not need aligning after installation.
II. The coupling does not need maintenance or lubrication once installed.

TCAE-L Series - Fixed Shaft

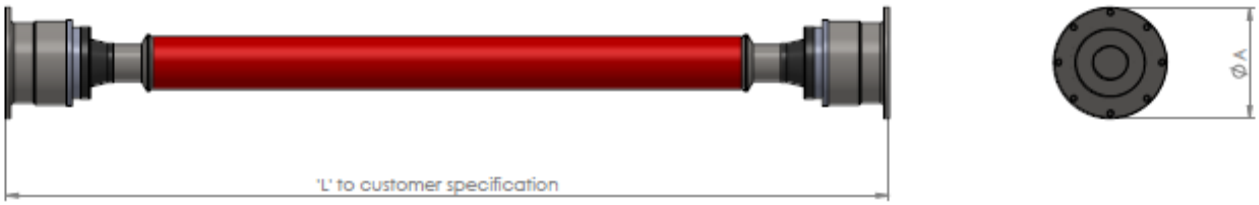

TCAE-L Series - Sliding Shaft

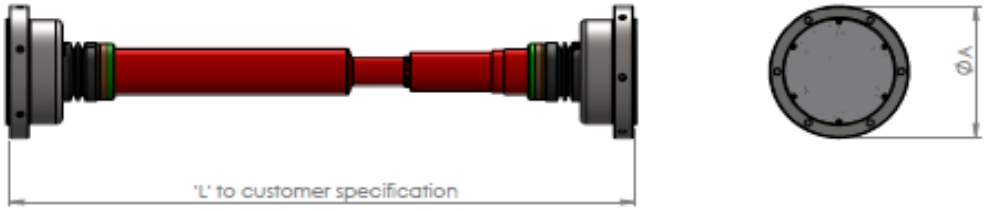

Dimensions and specifications subject to change without notice – Rev.3. Amended 7 Sep 2021

Thompson Coupling Alignment Eliminator (TCAE-L-4)
Technical Specifications and Details

Max. Static Torque	15,680 Nm	
Nominal Power Cap at (1),(3) :	1,000 rpm	77 kW
	1,500 rpm	106 kW
	3,000 rpm	184 kW
Max. Misalignment Angle	+/- 5°	
Max. Parallel Shaft Offset	+/- 17mm	
L_{10} bearing life (2)	Contact us for your specific application	
Max. Service Temperature	Up to 120 °C continuous	
Connection Details	Keyed shaft via taper lock bush #3525. Shaft size range 35mm - 100mm (1.50” - 4.00”)	
Max Swing Diameter	253 mm	
Overall Length	473 mm minimum	
Weight	Dependant on customer application by shaft length	
Rotational moment of Inertia	Dependant on customer application by shaft length	

(1) Nominal power capacity shown for different speeds is based on a coupling with a machine service factor of 1.25 operating at 1-degree misaligned angle and operating at 8 hours per day, 25 days per month for 3 years to give a service life of 7,200 hours.
(2) Actual bearing life depends upon a combination of factors. These include equivalent speed, torque and articulated angle. Additionally, shock loads, and environmental conditions may also affect life ratings.
(3) Maximum power cap. subject to shaft length.

Notes:

I. The Coupling can be laser aligned when initially installed but as it can handle axial, or parallel, or angular, or combination of any of these in misalignment, it does not need aligning after installation.
II. The coupling does not need maintenance or lubrication once installed.

TCAE-L Series - Fixed Shaft

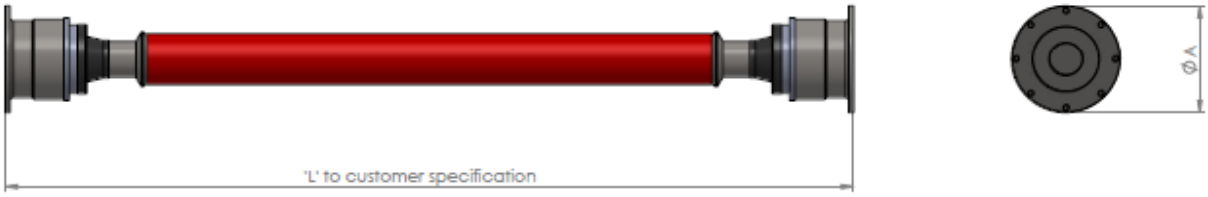

TCAE-L Series - Sliding Shaft

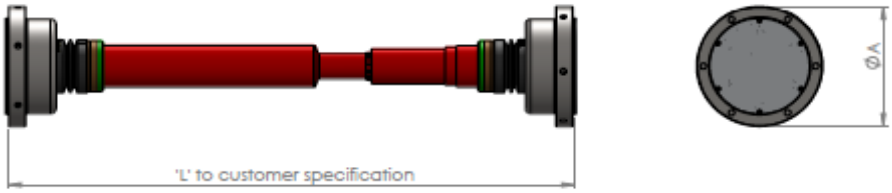

Dimensions and specifications subject to change without notice – Rev.3. Amended 7 Sep 2021

Thompson Coupling Alignment Eliminator (TCAE-L-5)
Technical Specifications and Details

Max. Static Torque	23,912 Nm	
Nominal Power Cap at (1),(3) :	1,000 rpm	124 kW
	1,500 rpm	172 kW
	3,000 rpm	302 kW
Max. Misalignment Angle	+/- 5°	
Max. Parallel Shaft Offset	+/- 18 mm	
L_{10} bearing life (2)	Contact us for your specific application	
Max. Service Temperature	Up to 120 °C continuous	
Connection Details	Keyed shaft via taper lock bush #3525. Shaft size range 35mm-100mm (1.50” – 4.00”)	
Max Swing Diameter	278 mm	
Overall Length	500 mm minimum	
Weight	Dependant on customer application by shaft length	
Rotational moment of Inertia	Dependant on customer application by shaft length	

(1) Nominal power capacity shown for different speeds is based on a coupling with a machine service factor of 1.25 operating at 1-degree misaligned angle and operating at 8 hours per day, 25 days per month for 3 years to give a service life of 7,200 hours.
(2) Actual bearing life depends upon a combination of factors. These include equivalent speed, torque and articulated angle. Additionally, shock loads, and environmental conditions may also affect life ratings.
(3) Maximum power cap. subject to shaft length.

Notes:

I. The Coupling can be laser aligned when initially installed but as it can handle axial, or parallel, or angular, or combination of any of these in misalignment, it does not need aligning after installation.
II. The coupling does not need maintenance or lubrication once installed.

TCAE-L Series - Fixed Shaft

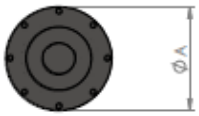

TCAE-L Series - Sliding Shaft

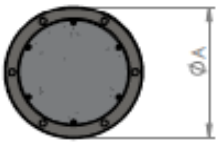

Dimensions and specifications subject to change without notice – Rev.3. Amended 7 Sep 2021

Thompson Coupling Alignment Eliminator (TCAE-L-6)
Technical Specifications and Details

Max. Static Torque	29,694 Nm	
Nominal Power Cap at (1),(4):	1,000 rpm	166 kW
	1,500 rpm	230 kW
	2,700 rpm (3)	369 kW
Max. Misalignment Angle	+/- 5°	
Max. Parallel Shaft Offset	+/- 19 mm	
L_{10} bearing life (2)	Contact us for your specific application	
Max. Service Temperature	Up to 120 °C continuous	
Connection Details	Keyed shaft via taper lock bush #3525. Shaft size range 35mm - 100mm (1.50” - 4.00”)	
Max Swing Diameter	300 mm	
Overall Length	582 mm minimum	
Weight	Dependant on customer application by shaft length	
Rotational moment of Inertia	Dependant on customer application by shaft length	

(1) Nominal power capacity shown for different speeds is based on a coupling with a machine service factor of 1.25 operating at 1-degree misaligned angle and operating at 8 hours per day, 25 days per month for 3 years to give a service life of 7,200 hours.
(2) Actual bearing life depends upon a combination of factors. These include equivalent speed, torque and articulated angle. Additionally, shock loads, and environmental conditions may also affect life ratings.
(3) Maximum rated speed.
(4) Maximum power cap. subject to shaft length.

Notes:

I. The Coupling can be laser aligned when initially installed but as it can handle axial, or parallel, or angular, or combination of any of these in misalignment, it does not need aligning after installation.
II. The coupling does not need maintenance or lubrication once installed.

TCAE-L Series - Fixed Shaft

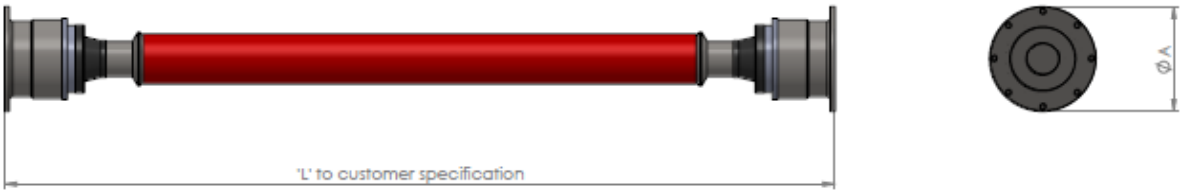

TCAE-L Series - Sliding Shaft

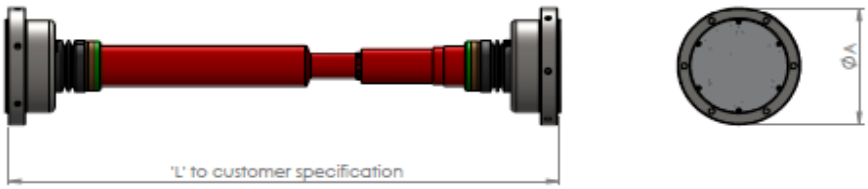

Dimensions and specifications subject to change without notice – Rev.3. Amended 7 Sep 2021

Thompson Coupling Alignment Eliminator (TCAE-L-7)
Technical Specifications and Details

Max. Static Torque	42,238 Nm	
Nominal Power Cap at (1),(4) :	1,000 rpm	240 kW
	1,500 rpm	334 kW
	2,300 rpm (3)	474 kW
Max. Misalignment Angle	+/- 5°	
Max. Parallel Shaft Offset	+/- 18 mm	
L_{10} bearing life (2)	Contact us for your specific application	
Max. Service Temperature	Up to 120 °C continuous	
Connection Details	Keyed shaft via taper lock bush #3525. Shaft size range 35mm - 100mm (1.50” - 4.00”)	
Max Swing Diameter	330 mm	
Overall Length	643 mm minimum	
Weight	Dependant on customer application by shaft length	
Rotational moment of Inertia	Dependant on customer application by shaft length	

(1) Nominal power capacity shown for different speeds is based on a coupling with a machine service factor of 1.25 operating at 1-degree misaligned angle and operating at 8 hours per day, 25 days per month for 3 years to give a service life of 7,200 hours.
(2) Actual bearing life depends upon a combination of factors. These include equivalent speed, torque and articulated angle. Additionally, shock loads, and environmental conditions may also affect life ratings.
(3) Maximum rated speed.
(4) Maximum power cap. subject to shaft length.

Notes:

I. The Coupling can be laser aligned when initially installed but as it can handle axial, or parallel, or angular, or combination of any of these in misalignment, it does not need aligning after installation.
II. The coupling does not need maintenance or lubrication once installed.

TCAE-L Series - Fixed Shaft

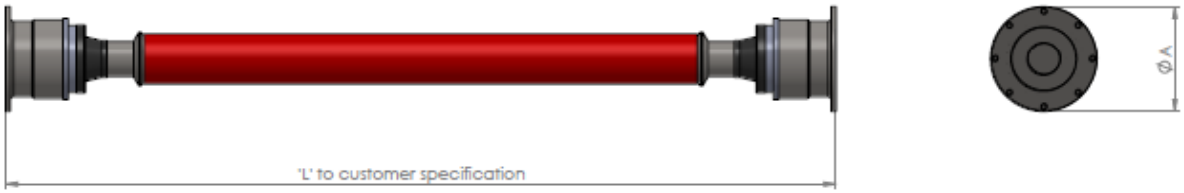

TCAE-L Series - Sliding Shaft

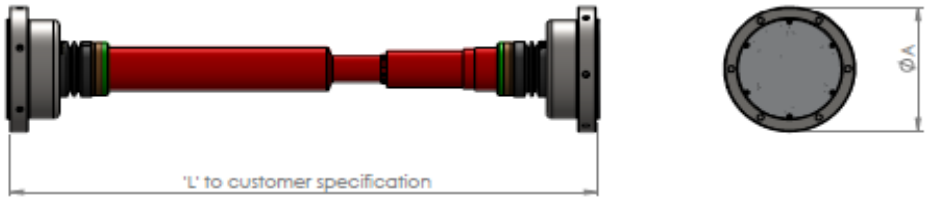

Dimensions and specifications subject to change without notice – Rev.3. Amended 7 Sep 2021

Thompson Coupling Alignment Eliminator (TCAE-L-8)
Technical Specifications and Details

Max. Static Torque	63,112 Nm	
Nominal Power Cap at (1),(4) :	1,000 rpm	316 kW
	1,500 rpm	442 kW
	2,000 rpm (3)	560 kW
Max. Misalignment Angle	+/- 5°	
Max. Parallel Shaft Offset	+/- 20mm	
L_{10} bearing life (2)	Contact us for your specific application	
Max. Service Temperature	Up to 120 °C continuous	
Connection Details	Keyed shaft via taper lock bush #3525. Shaft size range 35mm - 100mm (1.50” - 4.00”)	
Max Swing Diameter	370 mm	
Overall Length	760 mm minimum	
Weight	Dependant on customer application by shaft length	
Rotational moment of Inertia	Dependant on customer application by shaft length	

(1) Nominal power capacity shown for different speeds is based on a coupling with a machine service factor of 1.25 operating at 1-degree misaligned angle and operating at 8 hours per day, 25 days per month for 3 years to give a service life of 7,200 hours.
(2) Actual bearing life depends upon a combination of factors. These include equivalent speed, torque and articulated angle. Additionally, shock loads, and environmental conditions may also affect life ratings.
(3) Maximum rated speed.
(4) Maximum power cap. subject to shaft length.

Notes:

I. The coupling can be laser aligned when initially installed but as it can handle axial, or parallel, or angular, or combination of any of these in misalignment, it does not need aligning after installation.
II. The coupling requires low maintenance and lubrication once installed.

TCAE-L Series - Fixed Shaft

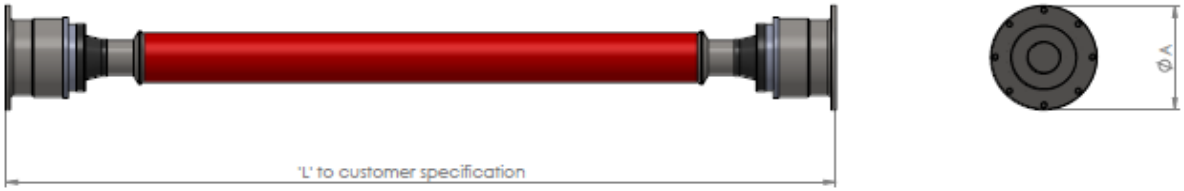

TCAE-L Series - Sliding Shaft

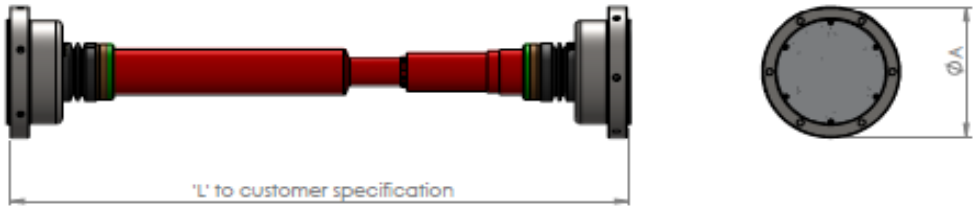

Dimensions and specifications subject to change without notice – Rev.3. Amended 7 Sep 2021

Thompson Coupling Alignment Eliminator TCAE-L-9
Technical Specifications and Details

Max. Static Torque	92,022 Nm	
Nominal Power Cap at (1),(4) :	1,000 rpm	403 kW
	1,500 rpm	559 kW
	1,600 rpm (3)	589 kW
Max. Misalignment Angle	+/- 5°	
Max. Parallel Shaft Offset	Dependant on customer application by shaft length	
L_{10} bearing life (2)	Contact us for your specific application	
Max. Service Temperature	Up to 100 °C	
Connection Details	336mm flange	
Max Swing Diameter	336mm	
Overall Length	535 mm minimum	
Axial expansion	+/- 40 mm	
Weight	Dependant on customer application by shaft length	
Rotational Moment of Inertia	Dependant on customer application by shaft length	

(1) Nominal power capacity shown for different speeds is based on a coupling with a machine service factor of 1.25 operating at 1-degree misaligned angle and operating at 8 hours per day, 25 days per month for 3 years to give a service life of 7,200 hours.
(2) Actual bearing life depends upon a combination of factors. These include equivalent speed, torque and articulated angle. Additionally, shock loads, and environmental conditions may also affect life ratings.
(3) Maximum rated speed.
(4) Maximum power cap. subject to shaft length.

Notes:

I. The Coupling can be laser aligned when initially installed but as it can handle axial, or parallel, or angular, or combination of any of these in misalignment, it does not need aligning after installation.
II. The coupling requires low maintenance and lubrication once installed.

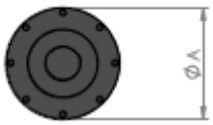

Dimensions and specifications subject to change without notice – Rev.3. Amended 7 Sep 2021

Thompson Coupling Alignment Eliminator TCAE-L-10
Technical Specifications and Details

Max. Static Torque	142,100 Nm	
Nominal Power Cap at (1),(4) :	1,000 rpm	591 kW
	1,300 rpm (3)	730 kW
Max. Misalignment Angle	+/- 5°	
Max. Parallel Shaft Offset	Dependant on customer application by shaft length	
L_{10} bearing life (2)	Contact us for your specific application	
Max. Service Temperature	Up to 100 °C	
Connection Details	376mm flange	
Max Swing Diameter	376mm	
Overall Length	570 mm minimum	
Axial expansion	+/- 40 mm	
Weight	Dependant on customer application by shaft length	
Rotational Moment of Inertia	Dependant on customer application by shaft length	

(1) Nominal power capacity shown for different speeds is based on a coupling with a machine service factor of 1.25 operating at 1-degree misaligned angle and operating at 8 hours per day, 25 days per month for 3 years to give a service life of 7,200 hours.
(2) Actual bearing life depends upon a combination of factors. These include equivalent speed, torque and articulated angle. Additionally, shock loads, and environmental conditions may also affect life ratings.
(3) Maximum rated speed.
(4) Maximum power cap. subject to shaft length.

Notes:

I. The coupling can be laser aligned when initially installed but as it can handle axial, or parallel, or angular, or combination of any of these in misalignment, it does not need aligning after installation.
II. The coupling requires low maintenance and lubrication once installed.

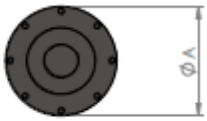

Dimensions and specifications subject to change without notice – Rev.3. Amended 7 Sep 2021

Thompson Coupling Alignment Eliminator TCAE-L-11
Technical Specifications and Details

Max. Static Torque	187,180 Nm	
Nominal Power Cap at (1),(4) :	1,000 rpm	840 kW
	1,200 rpm (3)	973 kW
Max. Misalignment Angle	+/- 5°	
Max. Parallel Shaft Offset	Dependant on customer application by shaft length	
L_{10} bearing life (2)	Contact us for your specific application	
Max. Service Temperature	Up to 100 °C	
Connection Details	420mm flange	
Max Swing Diameter	420mm	
Overall Length	650 mm minimum	
Axial expansion	+/- 44 mm	
Weight	Dependant on customer application by shaft length	
Rotational Moment of Inertia	Dependant on customer application by shaft length	

(1) Nominal power capacity shown for different speeds is based on a coupling with a machine service factor of 1.25 operating at 1-degree misaligned angle and operating at 8 hours per day, 25 days per month for 3 years to give a service life of 7,200 hours.
(2) Actual bearing life depends upon a combination of factors. These include equivalent speed, torque and articulated angle. Additionally, shock loads, and environmental conditions may also affect life ratings.
(3) Maximum rated speed.
(4) Maximum power cap. subject to shaft length.

Notes:

I. The coupling can be laser aligned when initially installed but as it can handle axial, or parallel, or angular, or combination of any of these in misalignment, it does not need aligning after installation.
II. The coupling requires low maintenance and lubrication once installed.

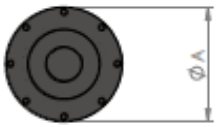

Dimensions and specifications subject to change without notice – Rev.3. Amended 7 Sep 2021

Thompson Coupling Alignment Eliminator TCAE-L-12
Technical Specifications and Details

Max. Static Torque	259,700 Nm	
Nominal Power Cap at (1),(4) :	1,000 rpm	1,161 kW
	1,100 rpm (3)	1,254 kW
Max. Misalignment Angle	+/- 5°	
Max. Parallel Shaft Offset	Dependant on customer application by shaft length	
L_{10} bearing life (2)	Contact us for your specific application	
Max. Service Temperature	Up to 100 °C	
Connection Details	462mm flange	
Max Swing Diameter	462mm	
Overall Length	715 mm minimum	
Axial expansion	+/- 46 mm	
Weight	Dependant on customer application by shaft length	
Rotational Moment of Inertia	Dependant on customer application by shaft length	

(1) Nominal power capacity shown for different speeds is based on a coupling with a machine service factor of 1.25 operating at 1-degree misaligned angle and operating at 8 hours per day, 25 days per month for 3 years to give a service life of 7,200 hours.
(2) Actual bearing life depends upon a combination of factors. These include equivalent speed, torque and articulated angle. Additionally, shock loads, and environmental conditions may also affect life ratings.
(3) Maximum rated speed.
(4) Maximum power cap. subject to shaft length.

Notes:

I. The coupling can be laser aligned when initially installed but as it can handle axial, or parallel, or angular, or combination of any of these in misalignment, it does not need aligning after installation.
II. The coupling requires low maintenance and lubrication once installed.

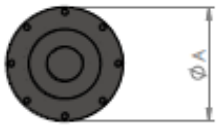

Dimensions and specifications subject to change without notice – Rev.3. Amended 7 Sep 2021

Thompson Coupling Alignment Eliminator TCAE-L-13
Technical Specifications and Details

Max. Static Torque	343,000 Nm	
Nominal Power Cap at (1),(4) :	1,000 rpm (3)	1,550 kW
Max. Misalignment Angle	+/- 5°	
Max. Parallel Shaft Offset	Dependant on customer application by shaft length	
L_{10} bearing life (2)	Contact us for your specific application	
Max. Service Temperature	Up to 100 °C	
Connection Details	504mm flange	
Max Swing Diameter	504mm	
Overall Length	770 mm minimum	
Axial expansion	+/- 50 mm	
Weight	Dependant on customer application by shaft length	
Rotational Moment of Inertia	Dependant on customer application by shaft length	

(1) Nominal power capacity shown for different speeds is based on a coupling with a machine service factor of 1.25 operating at 1-degree misaligned angle and operating at 8 hours per day, 25 days per month for 3 years to give a service life of 7,200 hours.
(2) Actual bearing life depends upon a combination of factors. These include equivalent speed, torque and articulated angle. Additionally, shock loads, and environmental conditions may also affect life ratings.
(3) Maximum rated speed.
(4) Maximum power cap. subject to shaft length.

Notes:

I. The coupling can be laser aligned when initially installed but as it can handle axial, or parallel, or angular, or combination of any of these in misalignment, it does not need aligning after installation.
II. The coupling requires low maintenance and lubrication once installed.

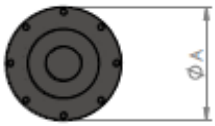

Dimensions and specifications subject to change without notice – Rev.3. Amended 7 Sep 2021

Thompson Coupling Alignment Eliminator TCAE-L-14
Technical Specifications and Details

Max. Static Torque	618,380 Nm	
Nominal Power Cap at (1),(4) :	800 rpm (3)	1,823 kW
Max. Misalignment Angle	+/- 5°	
Max. Parallel Shaft Offset	Dependant on customer application by shaft length	
L_{10} bearing life (2)	Contact us for your specific application	
Max. Service Temperature	Up to 100 °C	
Connection details	580mm flange	
Max Swing Diameter	580mm	
Overall Length	840 mm minimum	
Axial expansion	+/- 50 mm	
Weight	Dependant on customer application by shaft length	
Rotational moment of inertia	Dependant on customer application by shaft length	

(1) Nominal power capacity shown for different speeds is based on a coupling with a machine service factor of 1.25 operating at 1-degree misaligned angle and operating at 8 hours per day, 25 days per month for 3 years to give a service life of 7,200 hours.
(2) Actual bearing life depends upon a combination of factors. These include equivalent speed, torque and articulated angle. Additionally, shock loads, and environmental conditions may also affect life ratings.
(3) Maximum rated speed.
(4) Maximum power cap. subject to shaft length.

Notes:

I. The coupling can be laser aligned when initially installed but as it can handle axial, or parallel, or angular, or combination of any of these in misalignment, it does not need aligning after installation.
II. The coupling requires low maintenance and lubrication once installed.

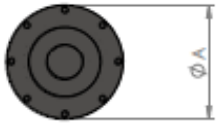

Dimensions and specifications subject to change without notice – Rev.3. Amended 7 Sep 2021